Raspberry Pi 4B HEAT-SINK ALUMINIUM CASE

Made with Aluminium Diecast material for Excellent Heat Dissipation and Rigidity

Exceptional Functionality with Superb Cost Efficiency!

RPH series

3 different types are available: Desktop, Flanged and DIN Rail

Desktop type
RPH-4B

Available in metallic silver and black for Raspberry Pi 4 Model B

Flanged type
RPH-4B-F

Compatible with VESA Mount Standards (75 x 75mm / 100 x 100mm), and can be installed on the back side of PC displays, etc.

DIN Rail type
RPHD-4B

Available with DIN rail mounting bracket. Perfect for mounting on control panels or switchboards.

Efficient Heat Dissipation Construct to Maximize your Raspberry Pi Performance!

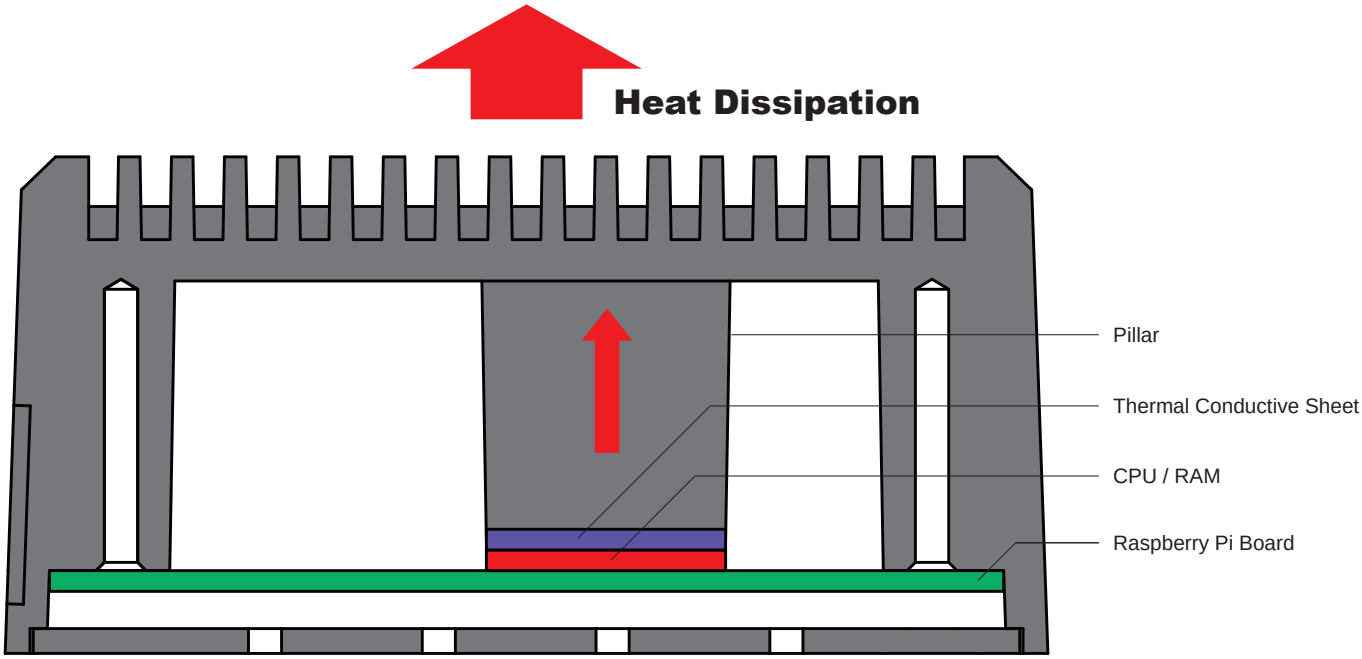

■ Attach thermal conductive sheet onto CPU and RAM. Heat is transferred to the heat-sink cover through the pillar.

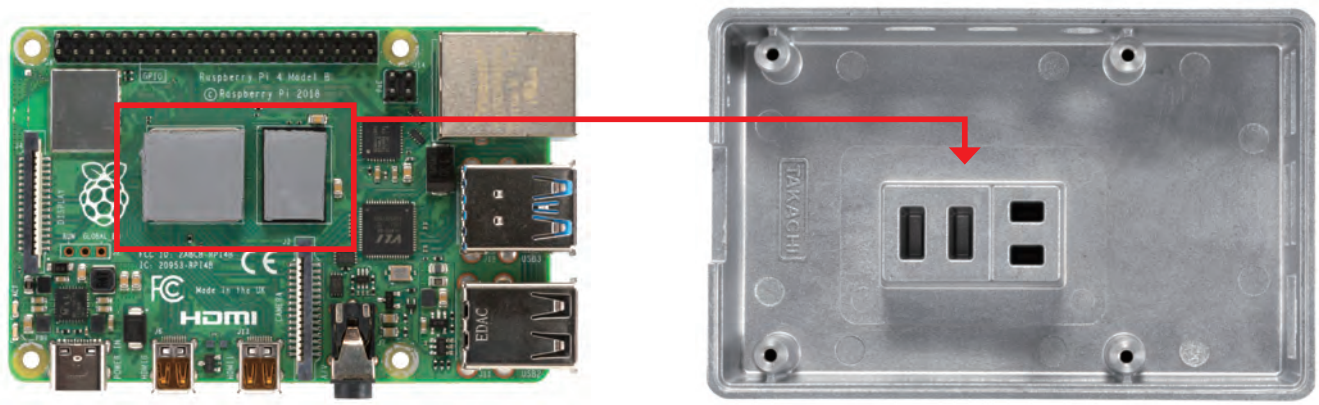

2 different Heat dissipation and Normal are available.

RPH-4B-H (Heat dissipation)

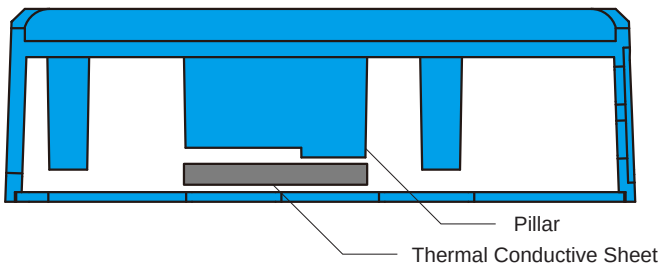

RPH-4B-N (Normal)

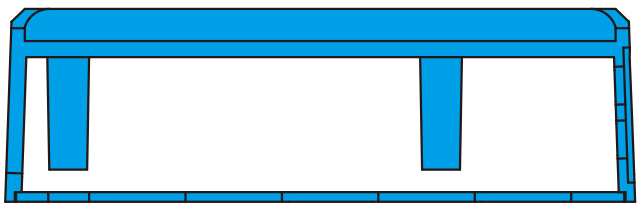

RPH series Raspberry Pi 4B HEAT-SINK ALUMINIUM CASE

NEW

Heat Resistant

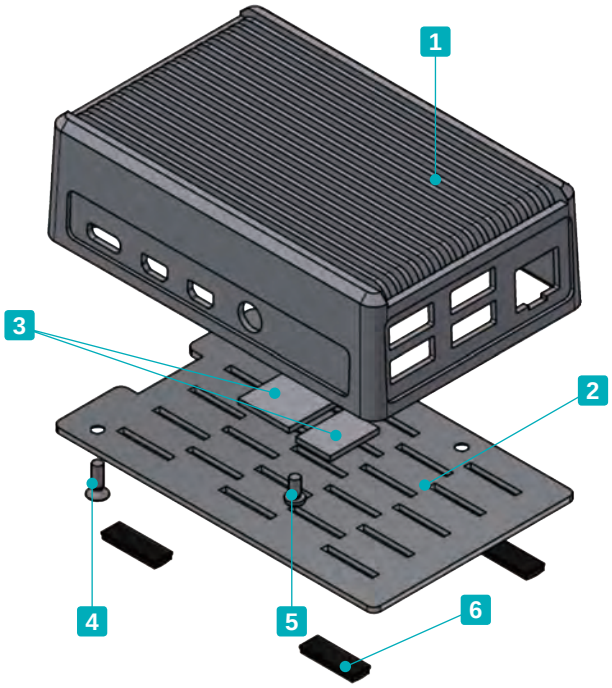

Heat Dissipation

Normal

- Heat-sink top cover case exclusively for use with the Raspberry Pi 4 Model B. Equipped with highly efficient heat-sink top cover.
- Constructed using diecast aluminium for strength and rigidity.
- 2 different Desktop and Flanged wall mount are available. Flanged wall mount type is compatible with VESA Mount Standards, (75 x 75mm / 100 x 100mm), and can be installed on the back side of PC displays, etc.

- Raspberry Pi board is not included.

Components

No.	Part name	Pcs	Material	Color / Finish
1	Top cover	1	Diecast aluminium ADC12	Silver • Black / Powder coated
2	Base	1	Aluminium A1100P t=1.5	Metallic silver / Painted (Conductive inside) • Black / Painted
3	Thermal conductive sheet (H type only)	2	Silicone polymer + Ceramic composite	Gray
4	Screw (M2.5-10 flat head)	2	Steel	Trivalent chromate • Black trivalent chromate
5	Screw for Board (M2.5-4 pan head)	2	Steel	Trivalent chromate
6	Rubber feet *	4	Polyurethane	Black

* Not applicable to flanged models.

RPH dimensions

■ DXF/DWG/PDF/STP drawings available on our website.

RPH-4B-H, RPH-4B-N (Desktop)

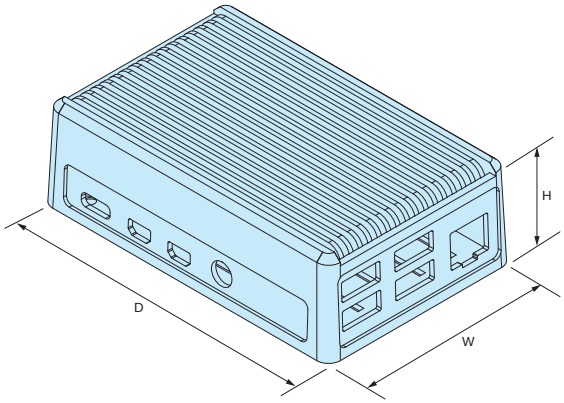

RPH-4B-FH, RPH-4B-FN (Flanged)

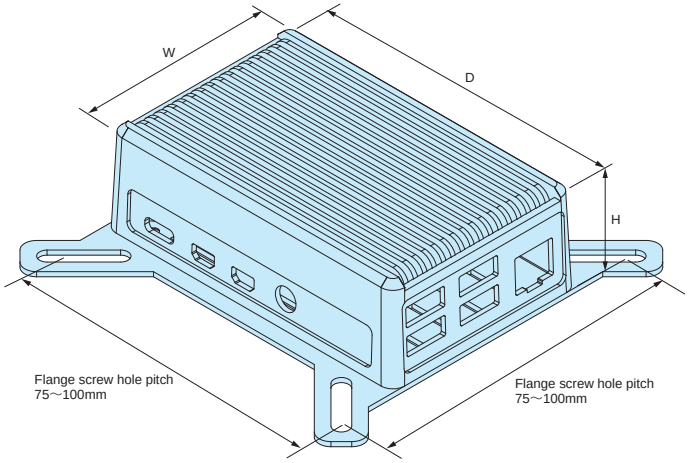

Product no. / Dimensions

Product no.		External dimensions			Type	Included accessory	※Thermal resistance rate (°C/W)	Weight (g)
● Silver	● Black	W	H	D				
RPH-4B-H-S	RPH-4B-H-B	63	30	98	Desktop Heat dissipation	Rubber feet Thermal conductive sheets	7.31	159.9
RPH-4B-N-S	RPH-4B-N-B	63	30	98	Desktop Normal	Rubber feet	7.31	142
RPH-4B-FH-S	RPH-4B-FH-B	63	31.5	98	Flanged Heat dissipation	Thermal conductive sheets	7.31	168.2
RPH-4B-FN-S	RPH-4B-FN-B	63	31.5	98	Flanged Normal	–	7.31	150.3

※ Thermal resistance test condition
- Ambient air cooling.
- Heat-sink fins are set perpendicular to the ground with temperature at 60°C.
- Powder coated aluminium diecast.
- Heat source is applied on the opposite side (inner side) of the fins.

Temperature measurement test

Raspberry Pi board is placed into the RPH-4B-H model and a commercially available Raspberry Pi plastic case.
Temperature is measured after 6 hours of continuous operation.
*Results will vary depending on usage period and environment. Listed values are in-house test reference values only.

RPH-4B-H
CPU Temperature : 45.7°C

Plastic case
CPU Temperature : 58.4°C

RPI series Raspberry Pi ALUMINIUM CASE

Conductive

Two Raspberry Pi boards can be installed into the RPI-2 and RPI-4B-2 models.

RPI-1F and RPI-4B-1F models are compatible with VESA Mount Standards (75 x 75mm / 100 x 100mm), and can be installed on the back side of PC displays, etc.

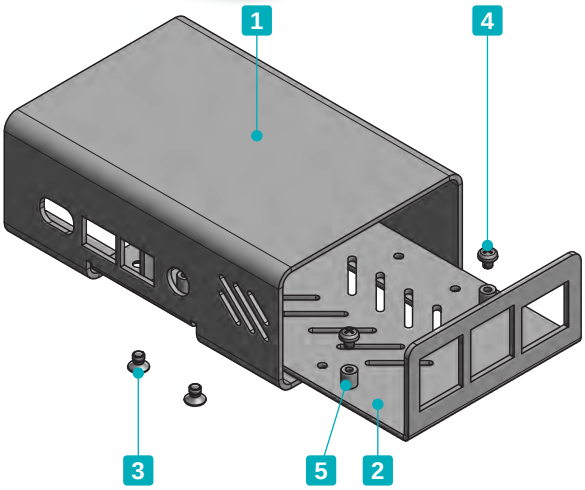

- Compatible with Raspberry Pi 2B, 3B, 3B+ and 4B boards.
- All aluminium, polished and elegant metallic silver finish.
- 3 different Single desktop, Dual desktop, and Single flanged are available.
- Conductive internal surface.

- Raspberry Pi Board is not included.

Components

No.	Part name	Pcs	Material	Color / Finish
1	Cover	1	Aluminium A1100P t=1.5	Metallic silver / Painted (Conductive inside)
2	Base	1	Aluminium A1100P t=1.5	Metallic silver / Painted (Conductive inside)
3	Screw (M3-4 flat head)	4	Steel	Trivalent chromate
4	Screw for Board (M2.5-4 pan head)	4	Steel	Trivalent chromate
5	Clinching standoff	4	Steel	Galvanized trivalent

RPI dimensions

■ DXF/DWG/PDF/STP drawings available on our website.

RPI-1, RPI-4B-1 (Single)

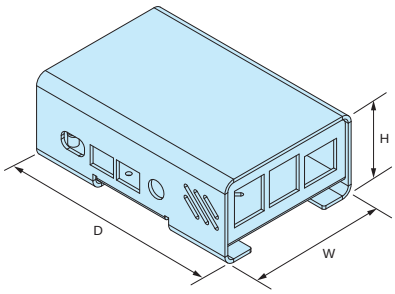

RPI-2, RPI-4B-2 (Dual)

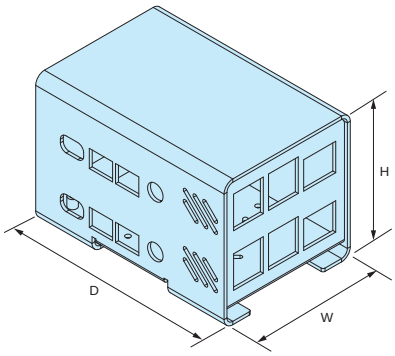

RPI-1F, RPI-4B-1F (Flanged)

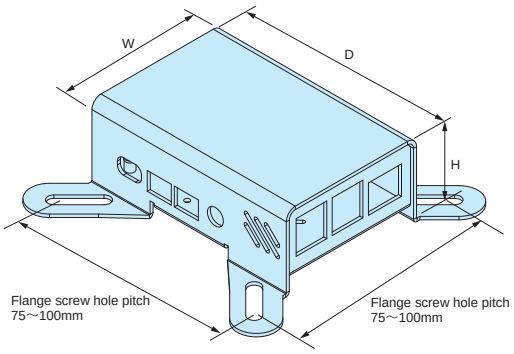

Product no. / Dimensions

Product no.	External dimensions			Type	Included accessory	Compatible board	Weight (g)
	W	H	D				
RPI-1	65	37	95	Single desktop	Rubber feet	Raspberry Pi 2B/3B/3B+	90.5
RPI-4B-1	65	37	97	Single desktop	Rubber feet	Raspberry Pi 4B	91.5
RPI-2	65	65	95	Dual desktop	Rubber feet Hexagonal spacer (M2.5-25)	Raspberry Pi 2B/3B/3B+	136
RPI-4B-2	65	65	97	Dual desktop	Rubber feet Hexagonal spacer (M2.5-25)	Raspberry Pi 4B	138.8
RPI-1F	65	37	95	Single flanged	–	Raspberry Pi 2B/3B/3B+	91.5
RPI-4B-1F	65	37	97	Single flanged	–	Raspberry Pi 4B	93.8

■ Rubber feet・・・Synthetic rubber / Black Hexagonal spacer・・・Brass / Nickel plated

Raspberry Pi Case Customization

Unique Logo (Inkjet print, Engraving)

See page Custom-1 ~ Custom-4, Custom-8, as well as our website for further details.

Various print processing methods are available, with no Minimum Order Quantity requirement!

Color Anodization • Painting

See page Custom-12, as well as our website for further details.

RPA series Raspberry Pi 4B ACRYLIC CASE

NEW

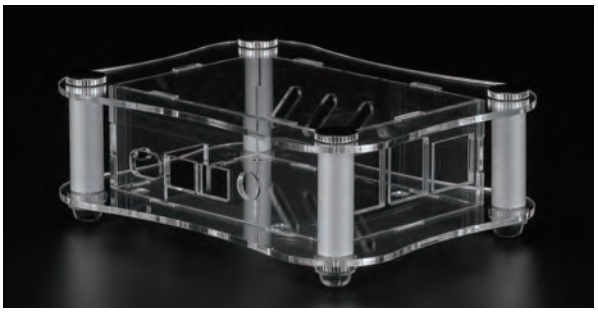

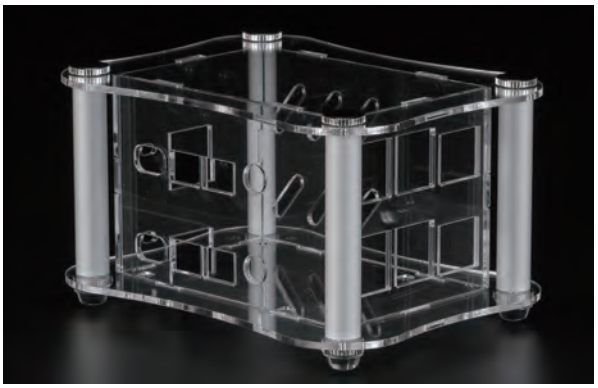

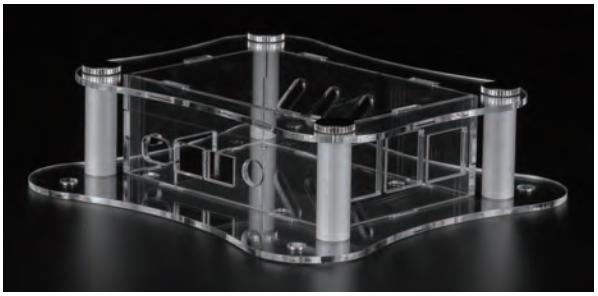

RPA-4B-1F is compatible with VESA Mount Standards (100 x 100mm), and can be installed on the back side of PC displays, etc.

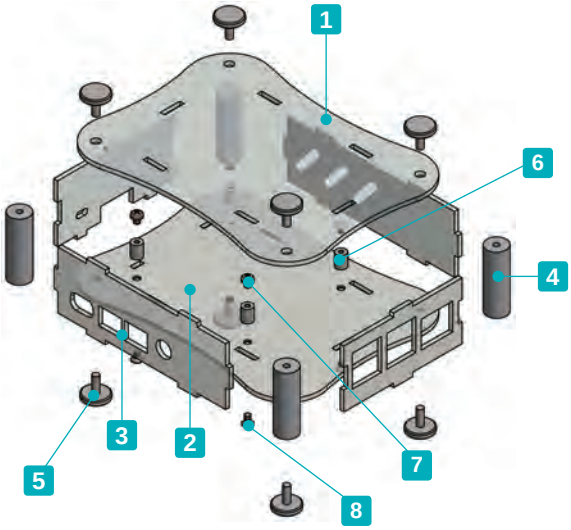

- Exclusively for use with Raspberry Pi 4B models.
- 3 different Single desktop, Dual desktop, and Single flanged are available.

- Raspberry Pi board is not included.

※Ethanol or other alcoholic solvents may cause the acrylic panel to crack.
Use a neutral cleaner or specialized acrylic cleaning solvent for cleaning.

※Included screws : RPA-4B-1 Knurled thumb screw x 8
RPA-4B-2 Knurled thumb screw x 8
RPA-4B-1F Knurled thumb screw x 4
M3-8 flat head, Trivalent chromate x 4

Components

No.	Part name	Pcs	Material	Color / Finish
1	Top cover	1	Acrylic t=2.0	Transparent
2	Bottom cover	1	Acrylic t=2.0	Transparent
3	Panel	4	Acrylic t=2.0	Transparent
4	Pillar	4	Extruded aluminium A6063S-T5	Silver / Anodized with clear coating
5	Knurled thumb screw (M3-8)※	4 / 8	Brass	Nickel plated
6	Standoff (for board)	4	Brass	Nickel plated
7	Screw for Board (M2.5-4 pan head)	4	Steel	Trivalent chromate
8	Screw for Standoffs (M2.5-5 flat head)	4	Steel	Trivalent chromate

RPA dimensions

■ DXF/DWG/PDF/STP drawings available on our website.

RPA-4B-1 (Single desktop)

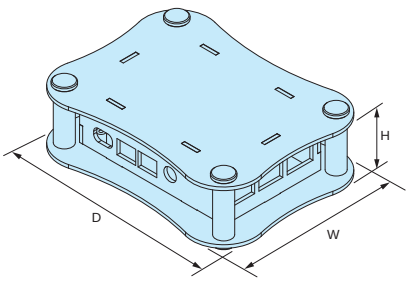

RPA-4B-2 (Dual desktop)

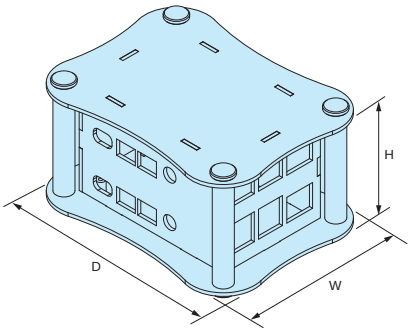

RPA-4B-1F (Single flanged)

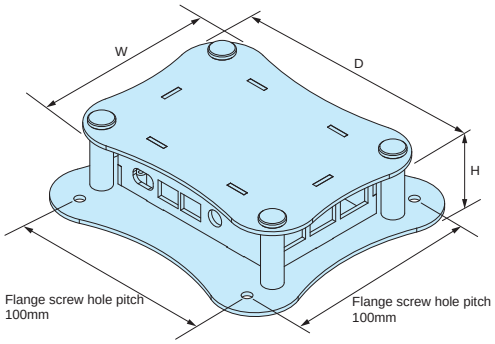

Product no. / Dimensions

Product no.	External dimensions			Type	Included accessory	Weight (g)
	W	H	D			
RPA-4B-1	95	34	125	Single desktop	Rubber feet	118
RPA-4B-2	95	62	125	Dual desktop	Rubber feet Round spacer (M2.5-25)	171.5
RPA-4B-1F	95	34	125	Single flanged	–	118.5

■ Rubber feet・・・Polyurethane / Transparent Round spacer・・・Brass / Nickel plated

Raspberry Pi Case Customization

Unique Logo (Inkjet print, Engraving)
See page Custom-1 ~ Custom-4, Custom-8, as well as our website for further details.

Various print processing methods are available, with no Minimum Order Quantity requirement!

Color Variation

Available in different color types, as well as smoked / tinted shades.

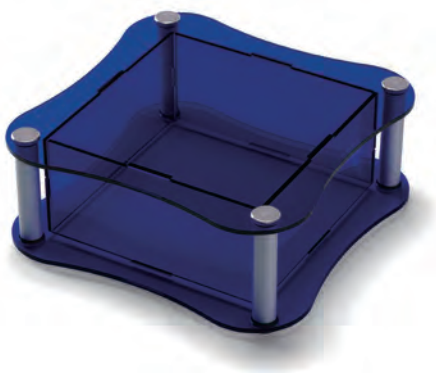

RPHD series DIN RAIL MOUNT Raspberry Pi HEAT-SINK CASE

NEW

Heat Resistant

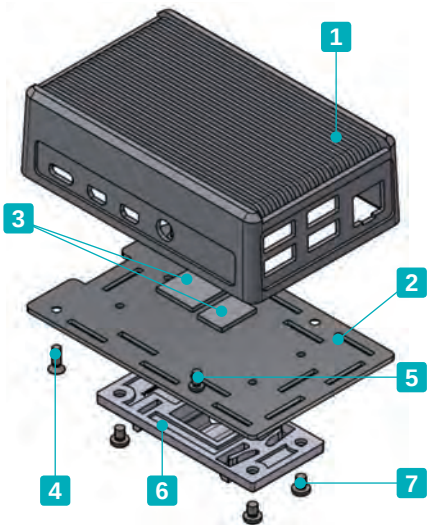

Heat Dissipation

Normal

- DIN rail mount heat-sink case exclusively for use with the Raspberry Pi 4B. Equipped with highly efficient heat-sink top cover.
- Constructed using diecast aluminium for strength and rigidity.
- 2 different Heat dissipation and Normal are available.

- Raspberry Pi board is not included.

Technical Data
Max load : 300g Operating Temperature : -20°C ~ +80°C

Components

No.	Part name	Pcs	Material	Color / Finish
1	Top cover	1	Diecast aluminium ADC12	Silver / Powder coated
2	Base	1	Aluminium A1100P t=1.5	Metallic silver / Painted (Conductive inside)
3	Thermal conductive sheet (H type only)	2	Silicone polymer + Ceramic composite	Gray
4	Screw (M2.5-10 flat head)	2	Steel	Trivalent chromate
5	Screw for Board (M2.5-4 pan head)	2	Steel	Trivalent chromate
6	Din-rail mounting base	1	PC • ABS UL94V-0	Light gray
7	Screw for Din-rail mounting base (M3-3 pan head)	4	Steel	Trivalent chromate

RPHD dimensions

■ DXF/DWG/PDF/STP drawings available on our website.

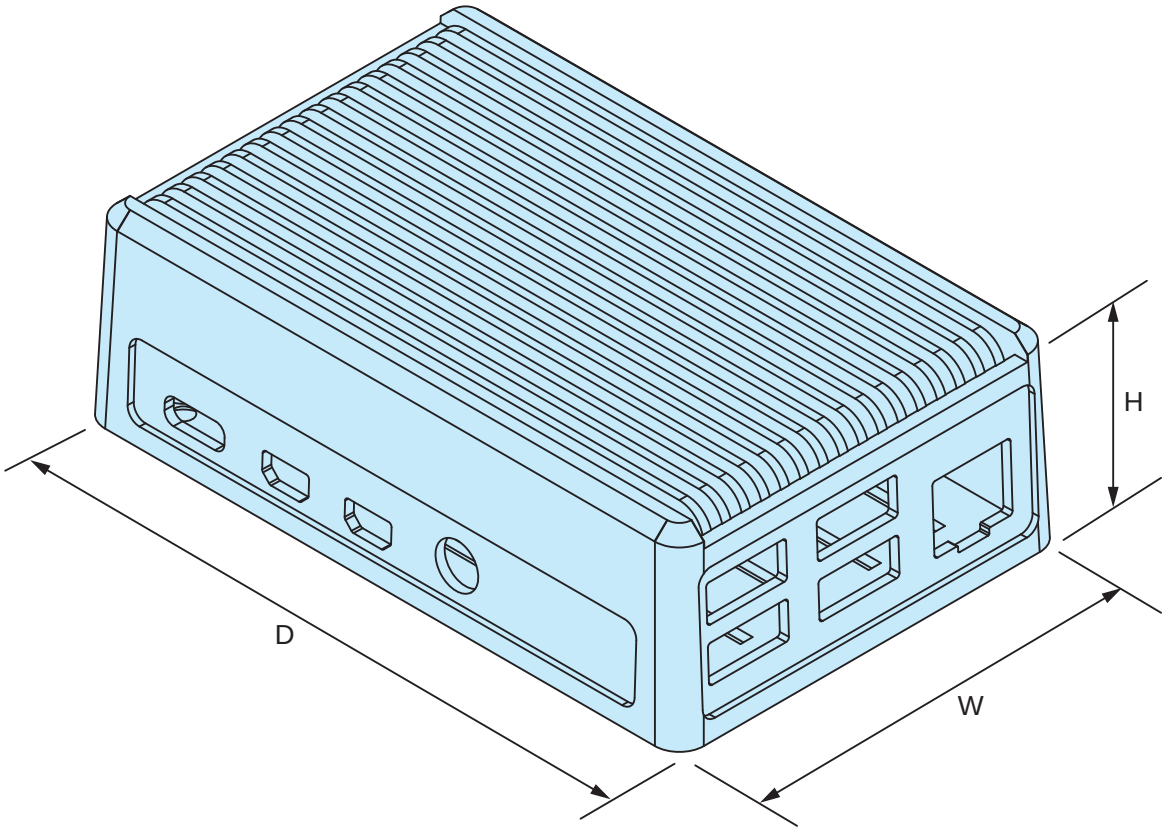

■ 2 different Heat Dissipation and Normal are available.

RPHD-4B-H (Heat dissipation)

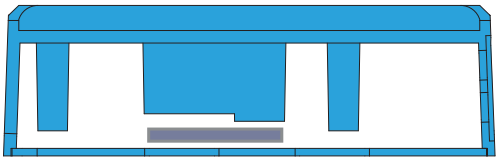

RPHD-4B-N (Normal)

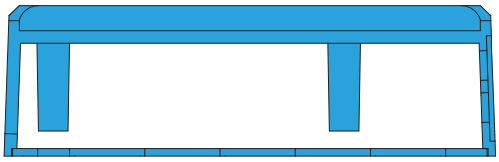

Product no. / Dimensions

*Din-rail mounting base height is not included in H dimension.

Product no.	External dimensions			Pillar Thermal conductive sheets	※Thermal resistance rate (°C/W)	Weight (g)
	W	H	D			
RPHD-4B-H-S	63	30	98	○	7.31	168.2
RPHD-4B-N-S	63	30	98	×	7.31	150.7

※Thermal resistance test condition
- Ambient air cooling.
- Heat-sink fins are set perpendicular to the ground with temperature at 60°C.
- Powder coated aluminium diecast.
- Heat source is applied on the opposite side (inner side) of the fins.

RPCB-4B EXPANSION PCB for Raspberry Pi 4B

NEW

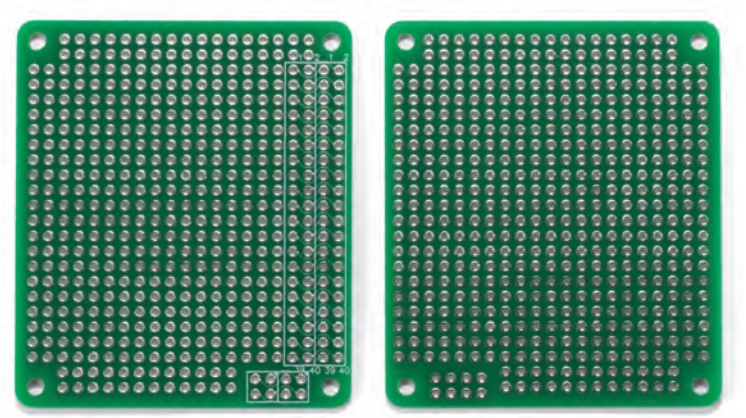

Installation example

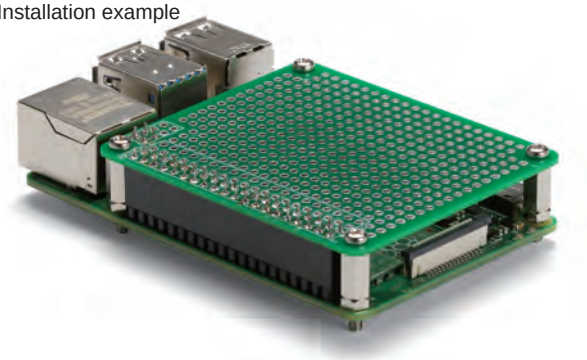

- Raspberry Pi Board is not included.
- Connector, spacer, and mounting screw set are sold separately.

- Material / Finish : Glass epoxy (FR-4) / Through-hole - Lead-free solder resist

- Expansion PCB for standard Raspberry Pi 4B boards. Use to install expansion parts or components.
- Environmentally friendly lead-free solder. RoHS3 compliant.

RPCB-4B dimensions

- DXF/DWG/PDF drawings available on our website.

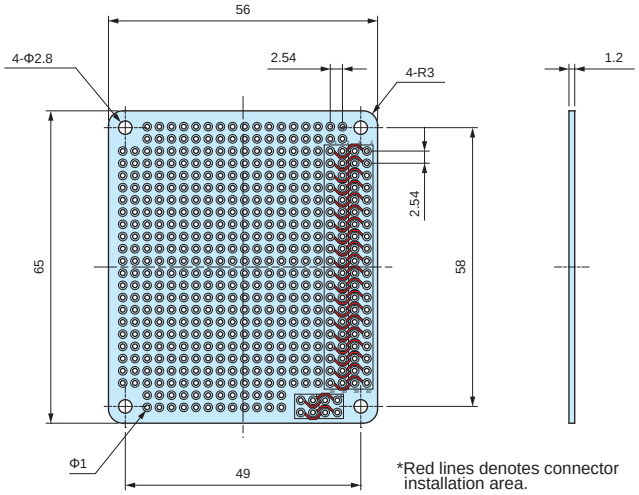

*Red lines denotes connector installation area.

Product no.

Product no.	Pack of
RPCB-4B	1

- Expansion PCB can also be utilized on RPI-4B and RPA series cases.
  See page 132 ~ 134 for RPI series case and page 135 ~ 136 for RPA series case.

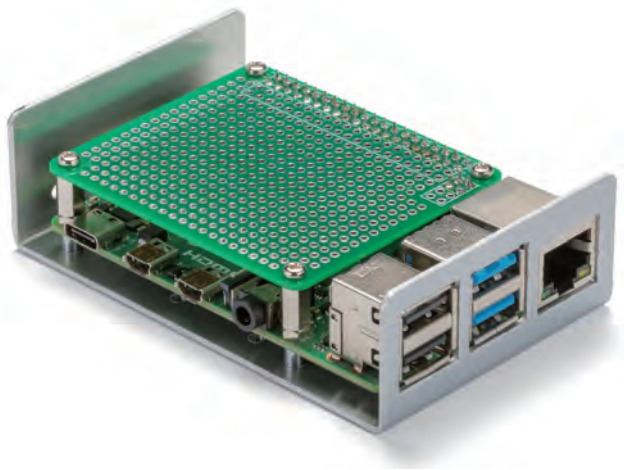

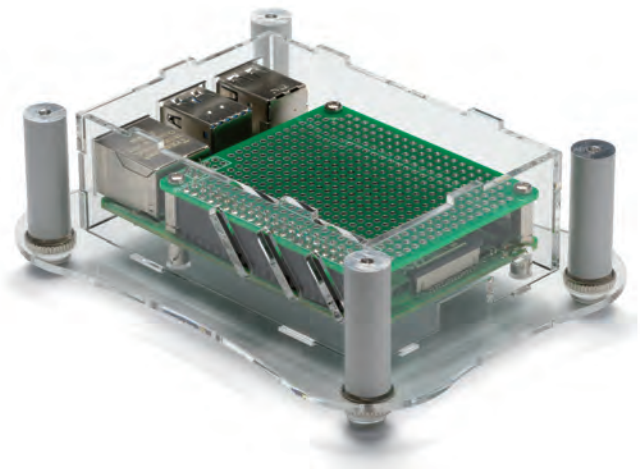

RPS series PIN SOCKET CONNECTOR for RPCB-4B

NEW

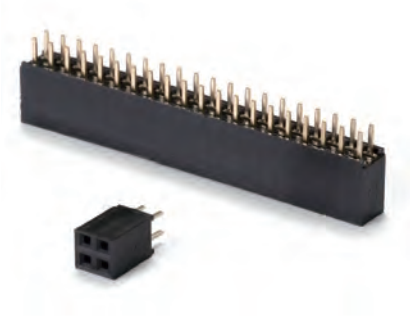

RPS dimensions

■ DXF/DWG/PDF drawings available on our website.

RPS2-2

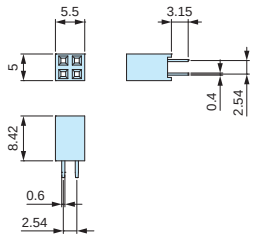

RPS2-20

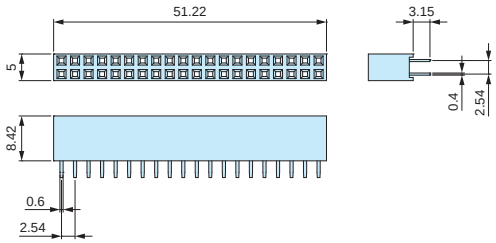

■ Material / Color : (Socket) FRPBT UL94V-0 /Black • (Pin) Phosphor bronze

■ 2.54mm hole-to-hole pitch pin socket connector.
Utilize with RPCB-4B expansion PCB for Raspberry Pi 4B.

Product no.

Product no.	Pin layout	Pack of
RPS2-2	4 (2 pin x 2)	1
RPS2-20	40 (20 pin x 2)	1

RPSP2.5-11 HEXAGONAL SPACER

NEW

RPSP2.5-11 dimensions

■ DXF/DWG/PDF drawings available on our website.

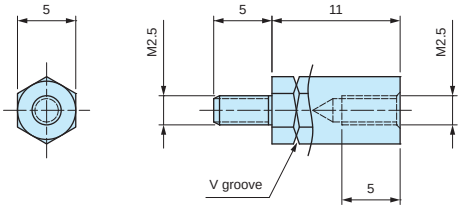

■ Material / Finish : Brass / Nickel plated

■ Brass hexagonal spacer with M2.5 threads on both male and female sides.
Utilize with RPCB-4B expansion PCB for Raspberry Pi 4B.

Product no.

Product no.	Pack of
RPSP2.5-11	4

MT2.5-4 MOUNTING SCREW for RPSP2.5-11

NEW

MT2.5-4 dimensions

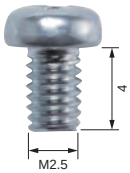

■ Material / Finish : Steel / Trivalent chromate

■ Utilize when affixing RPCB-4B expansion PCB.

Product no.

Product no.	Pack of
MT2.5-4	4

HIGH END DESIGN Aluminium Case HD series

Distinctive design, suitable for many different devices

Industrial Embedded System

Raspberry Pi

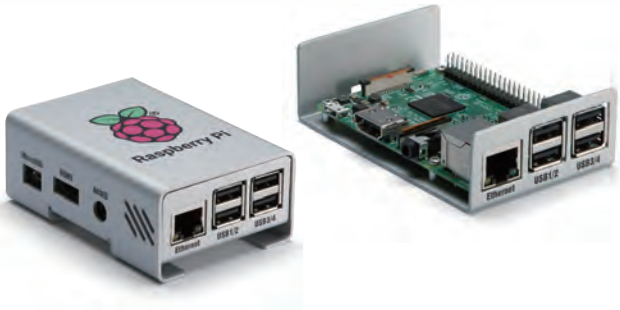

Data Transmitter / Receiver

Measurement / Test Equipment

Audio Amplifier

Power Supply

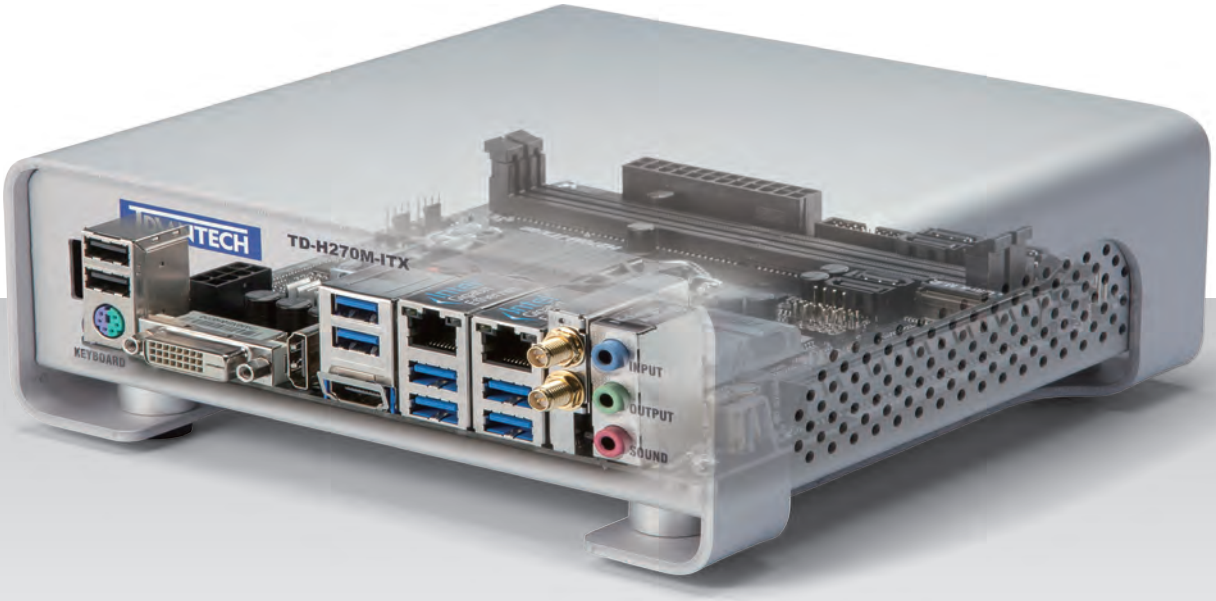

Compatibility with Standard Board Sizes

Raspberry Pi

Board Size
56×85mm

EURO BOARD

Board Size
100×160mm

3.5 inch Board

Board Size
146×102mm

Mini STX

Board Size
140×147mm

Mini ITX

Board Size
170×170mm

● See page 144 for more details.

HD series HIGH-END DESIGN ALUMINIUM CASE

Conductive

- Distinctively designed aluminium case.
- Polished, elegant and sleek metallic silver finish.
- Suitable for embedded system, measurement equipment, data transmitter, audio amplifier, and so on.

HD7-4-10S, 7-7-10S, 10-5-10S

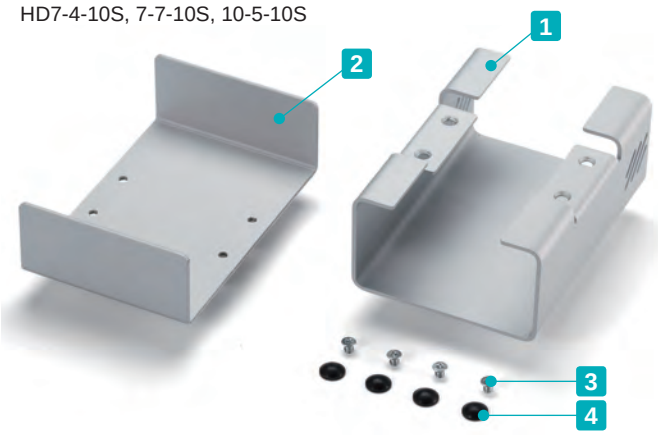

Other models

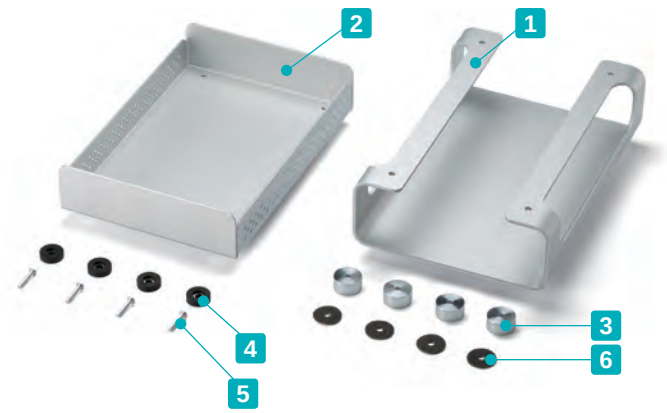

Components

HD7-4-10S, 7-7-10S, 10-5-10S

No.	Part name	Pcs	Material	Color / Finish
1	Cover	1	Aluminium A1100P	Metallic silver / Painted (Conductive inside)
2	Base	1	Aluminium A1100P	Metallic silver / Painted (Conductive inside)
3	Screw	4	Steel	Trivalent chromate
4	Rubber feet	4	Synthetic rubber	Black

Other models

No.	Part name	Pcs	Material	Color / Finish
1	Cover	1	HD11-5-18S ~ HD19-8-21S : Aluminium A1050P	Metallic silver / Painted
			HD21-14-25S ~ HD32-10-23S : Aluminium A1050P	Metallic silver / Painted
2	Base	1	HD11-5-18S ~ HD19-8-21S : Aluminium A1100P	Metallic silver / Painted (Conductive inside)
			HD21-14-25S to HD 32-10-23S : Aluminium A1050P	Metallic silver / Painted
3	Pillar feet	4	Extruded Aluminium A6063S-T5	Silver / Anodized
4	Rubber feet	4	Synthetic rubber	Black
5	Screw	4	Steel	Trivalent chromate
6	Cushion	4	Polyethylene	Black

HD dimensions

■ DXF/DWG/PDF/STP drawings available on our website.

HD7-4-10S • 7-7-10S • 10-5-10S (Conductive)

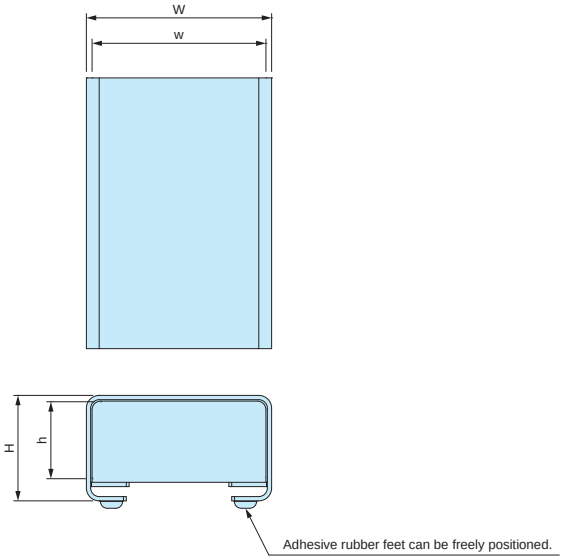

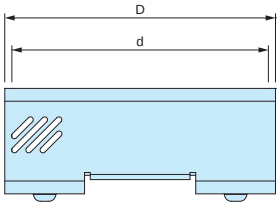

Other models (Non-conductive)

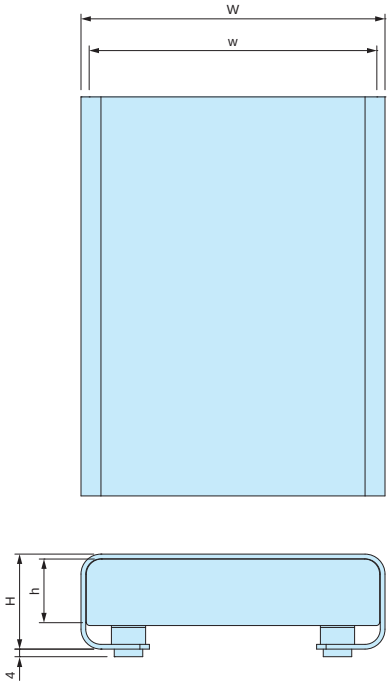

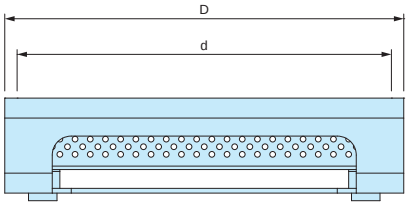

Product no. / Dimensions

Product no.	External dimensions			Internal dimensions			Included screw	Compatible board	Weight (g)
	W	H	D	w	h	d			
HD 7- 4-10S	65	37	95	61	27	90	M3-4 flat head	Raspberry Pi (56 x 85)	94.1
HD 7- 7-10S	65	65	95	61	55.5	90	M3-4 flat head		129
HD10- 5-10S	95	48	95	91	35.5	90	M3-4 flat head	–	138.5
HD11- 5-18S	111	50	175	102.4	33.5	162	M3-16 flat head	Euro Board (100 x 160)	386.3
HD11- 7-18S	111	70	175	102.4	53.5	162	M3-16 flat head		447.7
HD15- 7-16S	151	65	162	142.4	48.5	149	M3-16 flat head	Mini STX (140 x 147)	500.8
HD16- 6-12S	157	60	118	148.4	43.5	105	M3-16 flat head	3.5 Inch Board (146 x 102)	382.1
HD16- 5-21S	160	50	210	151.4	33.5	197	M3-16 flat head	–	573.9
HD19- 8-21S	192	75	210	182.4	57.5	197	M3-20 flat head	Mini ITX (170 x 170)	838.1
HD21-14-25S	210	135	250	199.4	117	236	M3-20 flat head	–	1587.8
HD26- 8-20S	260	80	200	249.4	62	186	M3-20 flat head	–	1162.8
HD32-10-23S	320	100	230	309.4	82	216	M3-20 flat head	–	1678

Uniquely Designed Aluminium Case with distinctive features and easy-to-assemble structure!

Flat panels with a curved arc design creates a unique aesthetic appearance and allows both easy assembly and customization.

Embedded Computer

Raspberry Pi Case

Audio Amplifier

Power Supply

Customization services available at TAKACHI

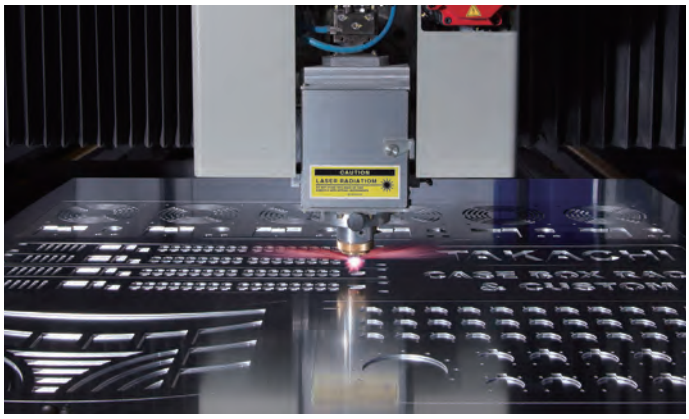

Fiber laser machine allows the processing of aluminium sheets with both high precision and speed.
See page Custom-9 and website for further details.

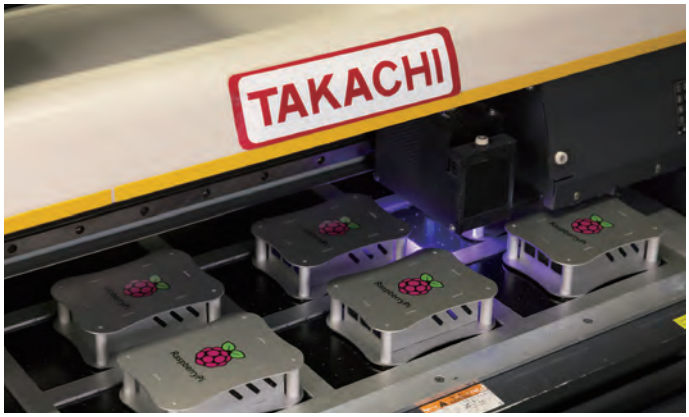

Digital inkjet printing enables high quality full color printing with minimal tooling cost.
High resolution photo images and color gradation can also be printed with ease.
See page Custom-3 ~ Custom-4 and website for further details.

Installation of self-clinching standoffs and nuts are possible.
TAKACHI has over 100 different types of clinching standoffs and nuts available, which can be installed with precision and speed.
See page Custom-11 and website for further details.

Custom Color Anodization • Custom Color Painting

ALR series ARC DESIGN ALUMINIUM CASE

NEW

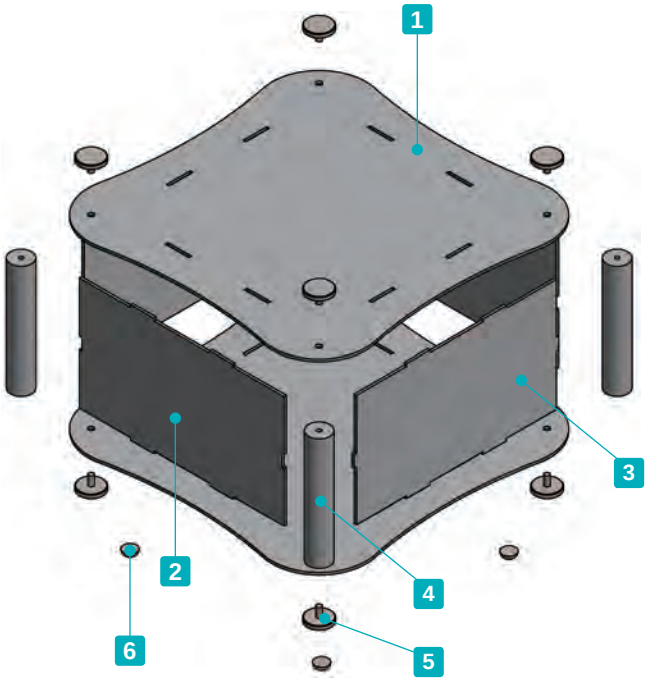

- Curved arc designed aluminium case with corner support columns.
- 6 different sizes are available.
- While elegantly designed, the flat panel structure allows for easy usage and customization.
- ALR11-5-17 and 11-8-17 models are compatible with the Euro Board. ALR18-7-18 and 18-10-18 models are compatible with the Mini ITX board.
- Possible to be used in a flat layout, or a standing layout.
- Knurled thumb screws for easy hand assembly.

- Custom size is available.

Components

No.	Part name	Pcs	Material	Color / Finish
1	Top · bottom cover	1 each	Aluminium A1100P	Silver anodized
2	W panel	2	Aluminium A1100P	Silver anodized
3	D panel	2	Aluminium A1100P	Silver anodized
4	Pillar	4	Extruded aluminium A6063S-T5	Silver anodized
5	Knurled thumb screw	8	Brass	Nickel plated
6	Rubber feet	4	Polyurethane	Transparent

ALR dimensions

■ DXF/DWG/PDF/STP drawings available on our website.

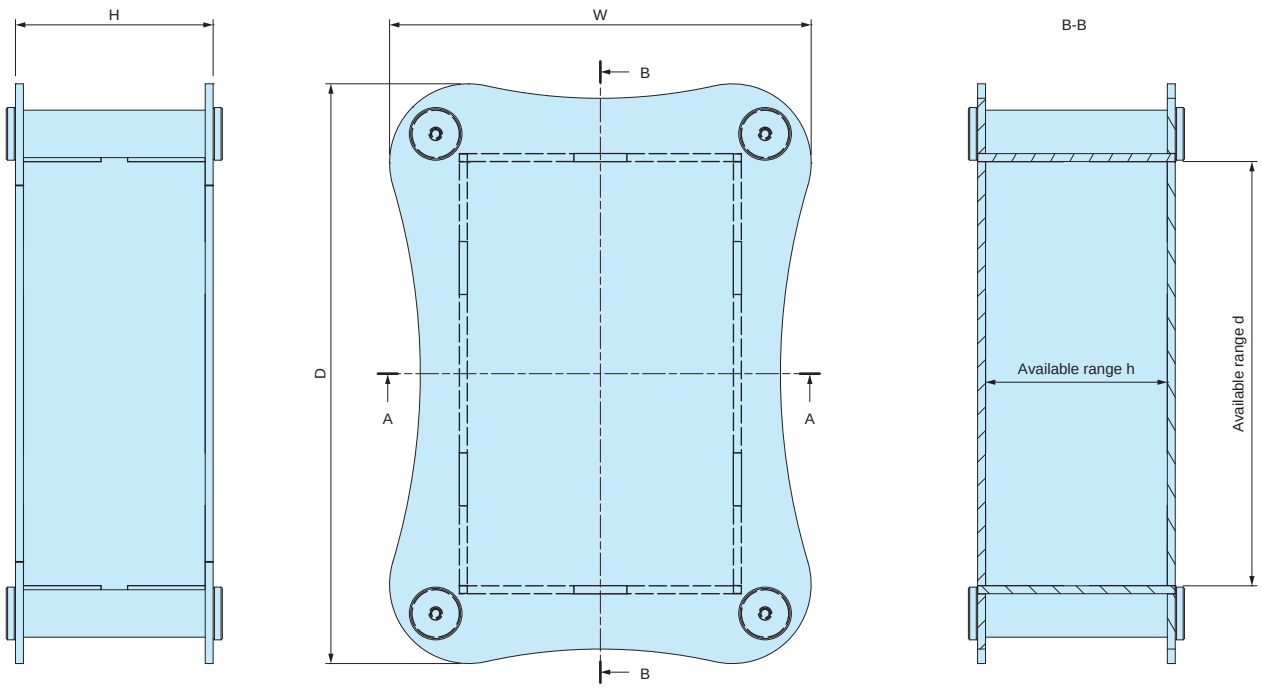

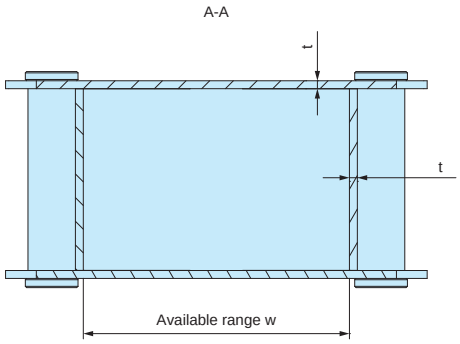

Product no. / Dimensions

Product no.	External dimensions			Available range (Internal)			t	Screw size	Compatible Board Size	Weight (g)
	W	H	D	w	h	d				
ALR10- 5-10	140	50	140	101	47	101	1.5	M3	–	274
ALR11- 5-17	163	45	223	101	41	161	2	M4	Euro Board (100 x 160)	653
ALR11- 8-17	163	75	223	101	71	161	2	M4		816.5
ALR18- 7-18	237	65	237	171	61	171	2	M4	Mini ITX (170 x 170)	1,004
ALR18-10-18	237	100	237	171	96	171	2	M4		1,225
ALR30- 7-20	362	70	264	296	66	196	2	M4	–	1,536

■ Similar transparent type design, as well as custom sizes are also available.

Skeleton acrylic case SKL series
See page 111 ~ 114

Custom sized skeleton acrylic case SKLF series
See website

Custom sized arc design aluminium case ALRF series
See website

AU series

NEXT GENERATION Aluminium Case

The perfect unity of flexibility, versatility, and appearance!

4 Distinct Models for Different Applications

Standard Model AU series

Standard model with front/rear sheet aluminium panels.

See page 151 ~ 154

Detachable Panel Model AUP series

Easy maintenance with detachable front/rear panels.
An EMC shielded AUPE series is also available.

See page 155 ~ 162

Control Box Model AUX series

Structure of extruded aluminium frames on 4 sides.

Suitable for control box use.

EMC shielded AUXE series is also available.

See page 163 ~ 170

Corner Guard Model AUG series

TPE Corner guard model.
An EMC shielded AUGE series is also available.

See page 171 ~ 178

Providing versatile and flexible enclosing solutions

The aluminium case AU series has an assembly-type structure which allows it to be easily customizable. Both versatile and flexible, it is designed to be used as various devices from the classic audio amplifiers to next-gen IoT devices.
Select from a huge line-up of 117 different sizes based on your application type and ideas.

Measuring Equipment

Fiber Optic Transmitter

IoT Gateway

Audio Amplifier

Command Panel

Industrial Embedded PC

Power Supply

AU series ALUMINIUM ENCLOSURE

NEW

- Elegantly designed aluminium enclosure with front/rear panels.
- A large selection of 117 different sizes to choose from.
- Top/bottom covers and front/rear panels are made from easily customizable sheet aluminium material.
- Versatile aluminium enclosure suitable for use as measuring instrument, controller, industrial embedded computer, power supply, audio amplifier, and so on.
- Feet is selectable between rubber or aluminium type.

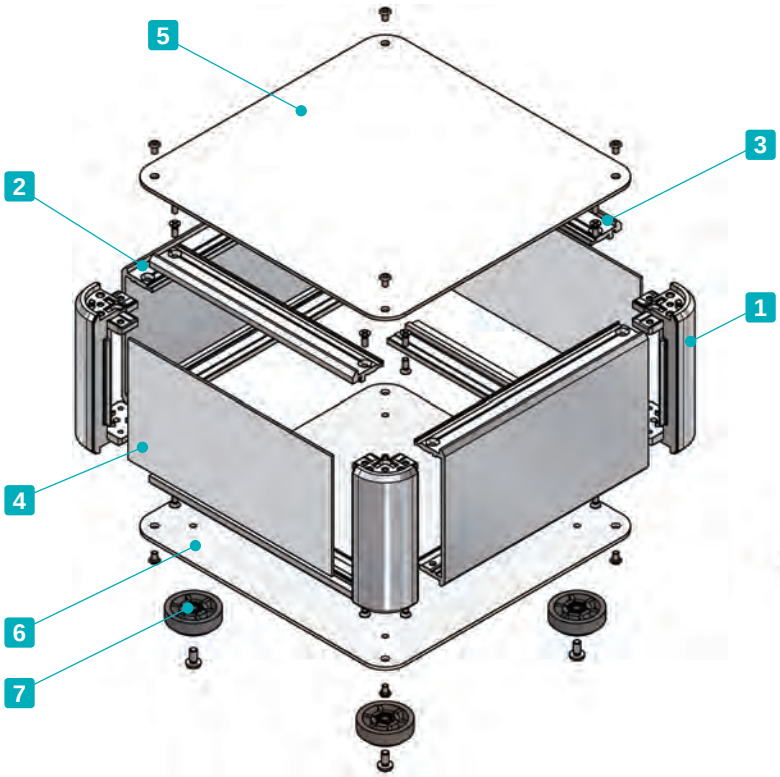

Included screws

- Top / Bottom cover
  M3-5 original trapezoid head (plus / hex) &
  Nickel plated / Black trivalent chromate x 8~16 pcs
- Frame / Panel support frame
  M3-8 flat head & Nickel plated x 16 pcs
- Rubber feet / Aluminium feet
  M4-8 bind head & Black trivalent chromate x 4 pcs

Recommended torque : 0.3 ~ 0.6N • m
* Recommended torque listed is for reference only; actual may differ.
  Assemble after testing torque.

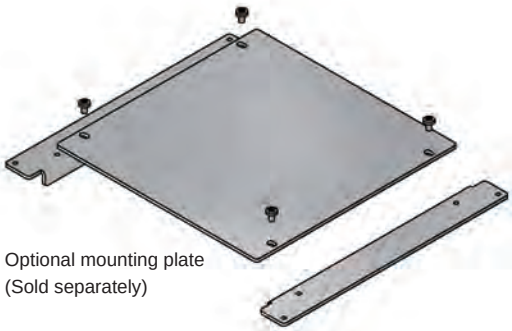

Optional mounting plate
(Sold separately)

Components

No.	Part name	Pcs	Material	Color / Finish
1	Corner block	4	Diecast aluminium ADC12	Silver • Black / Painted (Unfinished inside)
2	Frame	2	Extruded aluminium A6063S-T5	Silver • Black / Anodized
3	Panel support frame	4	Extruded aluminium A6063S-T5	Silver • Black / Anodized
4	Panel	2	Aluminium A1100P	Silver • Black / Anodized
5	Top cover	1	Aluminium A1100P	Silver • Black / Anodized
6	Bottom cover	1	Aluminium A1100P	Silver • Black / Anodized
7	Rubber feet : Aluminium feet	4	TPE (Elastomer) : Aluminium	Black : Silver • Black / Anodized

AU dimensions

■ DXF/DWG/PDF/STP drawings available on our website.

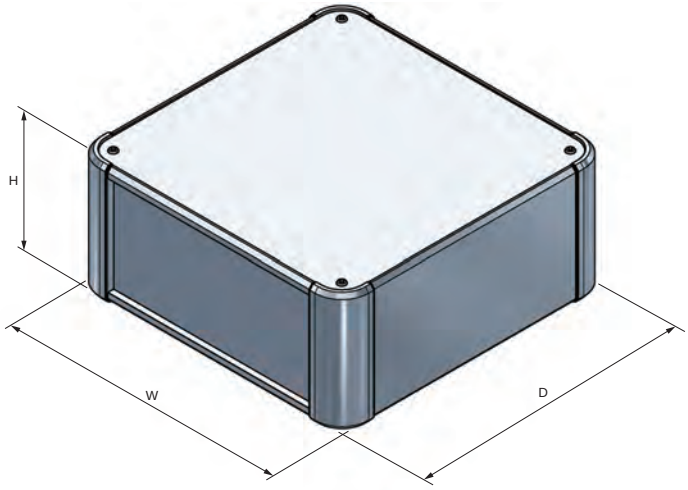

■ Feet is selectable between rubber or aluminium type.
※Rubber and aluminium feet height are different.

Rubber Feet

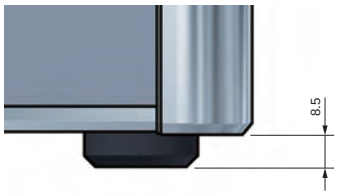

Aluminium Feet

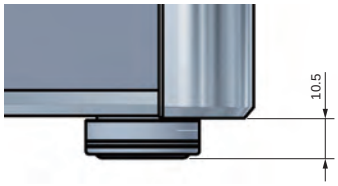

■ Mounting of a PCB or optional mounting plate is made easy through the use of the through-holes inside the aluminium diecast corner block.
See page 180 for how to install mounting plate.

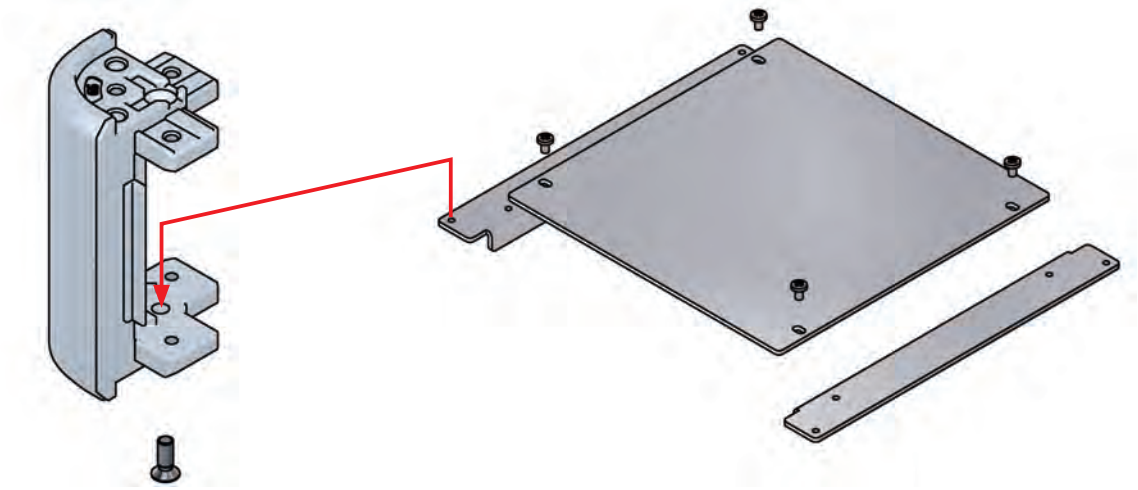

Accessories (Optional parts)

Mounting plate AUC series
See page 179 ~ 180

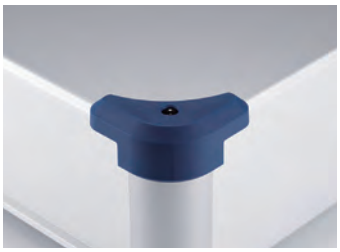

Corner guard AUCG series
See page 180

Elastomer carrying handle FM200
See website

Tilt leg TLW series
See page 222

To select Feet/Screw/Color types, follow steps 1 ~ 3 below.

1 Feet Type

*Color of "Aluminium Feet" will be the same as bottom cover color.

R Rubber (Black / Unfinished)

A Aluminium (Silver / Anodized) (Black / Anodized)

2 Screw Type

*Color of screw will be the same as top • bottom cover color.

P Plus (Silver / Nickel plated) (Black / Black trivalent chromate)

H Hex (Silver / Nickel plated) (Black / Black trivalent chromate)

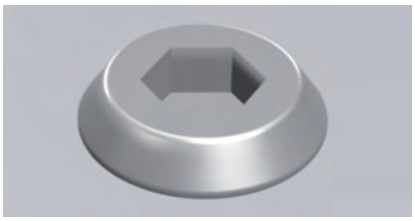

Hex wrench included.

3 Color Type

Please choose from the color combinations listed below.

S S

S B

B S

B B

To determine a product number, suffix Feet/Screw/Color code at the end of product number.

Product Number

AU □ - □ - □ □ □ - □ □

H-W-D dimensions	1 Feet	2 Screw	3 Color
See page 154 for dimensions and product no.	R or A	P or H	SS • SB • BS • BB

Numbering example :
If looking at "H88 x W300 x D200mm, Feet type A, Screw type H, Color type BS"

➡ **AU 88-30-20 AH-BS**

Product no. / Dimensions

■ Please suffix feet, screw, and color code at the end of the product number

Product no.	H	W	D	Weight (kg)
AU 66-16-16□□-□□	66	160	160	0.9
AU 66-16-20□□-□□	66	160	200	1.0
AU 66-16-25□□-□□	66	160	250	1.2
AU 66-16-30□□-□□	66	160	300	1.3
AU 66-20-16□□-□□	66	200	160	1.0
AU 66-20-20□□-□□	66	200	200	1.1
AU 66-20-25□□-□□	66	200	250	1.3
AU 66-20-30□□-□□	66	200	300	1.5
AU 66-20-36□□-□□	66	200	360	1.7
AU 66-20-43□□-□□	66	200	430	2.0
AU 66-25-16□□-□□	66	250	160	1.1
AU 66-25-20□□-□□	66	250	200	1.3
AU 66-25-25□□-□□	66	250	250	1.5
AU 66-25-30□□-□□	66	250	300	1.7
AU 66-25-36□□-□□	66	250	360	2.0
AU 66-25-43□□-□□	66	250	430	2.3
AU 66-30-16□□-□□	66	300	160	1.3
AU 66-30-20□□-□□	66	300	200	1.5
AU 66-30-25□□-□□	66	300	250	1.7
AU 66-30-30□□-□□	66	300	300	1.9
AU 66-30-36□□-□□	66	300	360	2.2
AU 66-30-43□□-□□	66	300	430	2.6
AU 66-30-50□□-□□	66	300	500	2.9
AU 66-36-20□□-□□	66	360	200	1.7
AU 66-36-25□□-□□	66	360	250	1.9
AU 66-36-30□□-□□	66	360	300	2.2
AU 66-36-36□□-□□	66	360	360	2.5
AU 66-36-43□□-□□	66	360	430	2.9
AU 66-36-50□□-□□	66	360	500	3.3
AU 66-43-20□□-□□	66	430	200	1.9
AU 66-43-25□□-□□	66	430	250	2.2
AU 66-43-30□□-□□	66	430	300	2.5
AU 66-43-36□□-□□	66	430	360	2.9
AU 66-43-43□□-□□	66	430	430	3.3
AU 66-43-50□□-□□	66	430	500	3.7
AU 66-50-30□□-□□	66	500	300	2.8
AU 66-50-36□□-□□	66	500	360	3.3
AU 66-50-43□□-□□	66	500	430	3.7
AU 66-50-50□□-□□	66	500	500	4.2
AU 88-16-16□□-□□	88	160	160	0.9
AU 88-16-20□□-□□	88	160	200	1.1
AU 88-16-25□□-□□	88	160	250	1.3
AU 88-16-30□□-□□	88	160	300	1.4
AU 88-20-16□□-□□	88	200	160	1.1
AU 88-20-20□□-□□	88	200	200	1.2
AU 88-20-25□□-□□	88	200	250	1.4
AU 88-20-30□□-□□	88	200	300	1.6
AU 88-20-36□□-□□	88	200	360	1.8
AU 88-20-43□□-□□	88	200	430	2.1
AU 88-25-16□□-□□	88	250	160	1.2
AU 88-25-20□□-□□	88	250	200	1.4
AU 88-25-25□□-□□	88	250	250	1.6
AU 88-25-30□□-□□	88	250	300	1.8
AU 88-25-36□□-□□	88	250	360	2.1
AU 88-25-43□□-□□	88	250	430	2.4
AU 88-30-16□□-□□	88	300	160	1.4
AU 88-30-20□□-□□	88	300	200	1.6
AU 88-30-25□□-□□	88	300	250	1.8
AU 88-30-30□□-□□	88	300	300	2.1

Product no.	H	W	D	Weight (kg)
AU 88-30-36□□-□□	88	300	360	2.4
AU 88-30-43□□-□□	88	300	430	2.7
AU 88-30-50□□-□□	88	300	500	3.1
AU 88-36-20□□-□□	88	360	200	1.8
AU 88-36-25□□-□□	88	360	250	2.1
AU 88-36-30□□-□□	88	360	300	2.3
AU 88-36-36□□-□□	88	360	360	2.7
AU 88-36-43□□-□□	88	360	430	3.1
AU 88-36-50□□-□□	88	360	500	3.5
AU 88-43-20□□-□□	88	430	200	2.1
AU 88-43-25□□-□□	88	430	250	2.4
AU 88-43-30□□-□□	88	430	300	2.7
AU 88-43-36□□-□□	88	430	360	3.1
AU 88-43-43□□-□□	88	430	430	3.5
AU 88-43-50□□-□□	88	430	500	4.0
AU 88-50-30□□-□□	88	500	300	3.0
AU 88-50-36□□-□□	88	500	360	3.4
AU 88-50-43□□-□□	88	500	430	3.9
AU 88-50-50□□-□□	88	500	500	4.4
AU133-16-16□□-□□	132.5	160	160	1.2
AU133-16-20□□-□□	132.5	160	200	1.4
AU133-16-25□□-□□	132.5	160	250	1.6
AU133-16-30□□-□□	132.5	160	300	1.8
AU133-20-16□□-□□	132.5	200	160	1.3
AU133-20-20□□-□□	132.5	200	200	1.5
AU133-20-25□□-□□	132.5	200	250	1.7
AU133-20-30□□-□□	132.5	200	300	2.0
AU133-20-36□□-□□	132.5	200	360	2.3
AU133-20-43□□-□□	132.5	200	430	2.6
AU133-25-16□□-□□	132.5	250	160	1.5
AU133-25-20□□-□□	132.5	250	200	1.7
AU133-25-25□□-□□	132.5	250	250	2.0
AU133-25-30□□-□□	132.5	250	300	2.2
AU133-25-36□□-□□	132.5	250	360	2.6
AU133-25-43□□-□□	132.5	250	430	3.0
AU133-30-16□□-□□	132.5	300	160	1.7
AU133-30-20□□-□□	132.5	300	200	1.9
AU133-30-25□□-□□	132.5	300	250	2.2
AU133-30-30□□-□□	132.5	300	300	2.5
AU133-30-36□□-□□	132.5	300	360	2.8
AU133-30-43□□-□□	132.5	300	430	3.3
AU133-30-50□□-□□	132.5	300	500	3.7
AU133-36-20□□-□□	132.5	360	200	2.1
AU133-36-25□□-□□	132.5	360	250	2.5
AU133-36-30□□-□□	132.5	360	300	2.8
AU133-36-36□□-□□	132.5	360	360	3.2
AU133-36-43□□-□□	132.5	360	430	3.7
AU133-36-50□□-□□	132.5	360	500	4.1
AU133-43-20□□-□□	132.5	430	200	2.4
AU133-43-25□□-□□	132.5	430	250	2.8
AU133-43-30□□-□□	132.5	430	300	3.2
AU133-43-36□□-□□	132.5	430	360	3.6
AU133-43-43□□-□□	132.5	430	430	4.1
AU133-43-50□□-□□	132.5	430	500	4.6
AU133-50-30□□-□□	132.5	500	300	3.5
AU133-50-36□□-□□	132.5	500	360	4.0
AU133-50-43□□-□□	132.5	500	430	4.6
AU133-50-50□□-□□	132.5	500	500	5.1

*Weight listed is calculated based on rubber feet selection.

AUP series ALUMINIUM ENCLOSURE with DETACHABLE PANELS

NEW

Conductive

- Elegantly designed aluminium enclosure with easily detachable front/rear panels.
  Captive screws allow for ease of maintenance as there is little risk of the screws dropping out and getting lost.
- The inner surface is unfinished, allowing the enclosure to be conductive.
- A large selection of 117 different sizes to choose from.

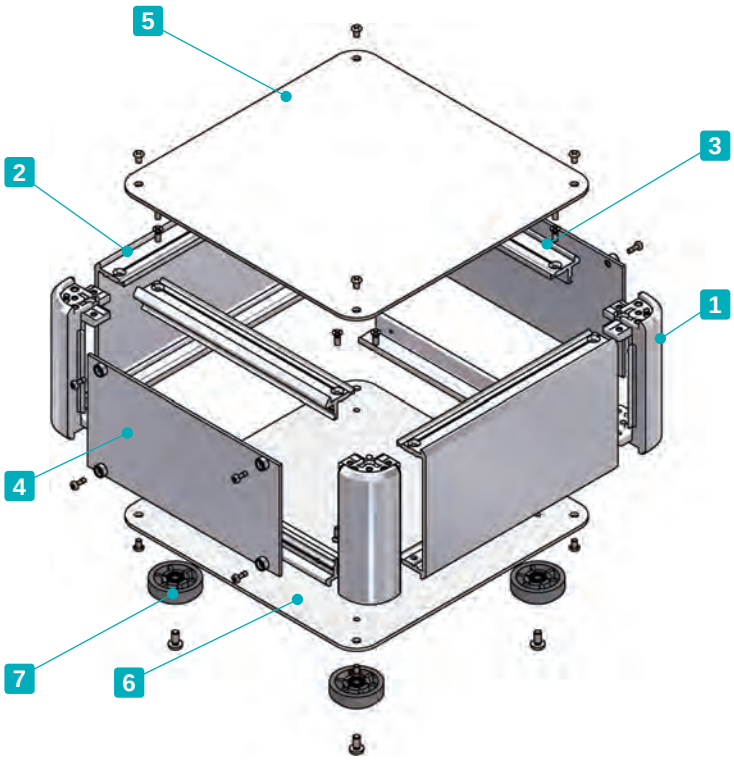

Included screws

- Top / Bottom cover
  M3-5 original trapezoid head (plus / hex) &
  M3-8 flat head & Nickel plated x 16 pcs
- Frame / Panel support frame
  M3-8 flat head & Nickel plated x 16 pcs
- Rubber feet / Aluminium feet
  M4-8 bind head & Black trivalent chromate x 4 pcs
- Panel
  Captive M2.5-7 pan head & Nickel plated x 8~12 pcs

Recommended torque : M2.5 - 0.15 ~ 0.2N • m
M3 / M4 - 0.3 ~ 0.6N • m

* Recommended torque listed is for reference only; actual may differ.
  Assemble after testing torque.

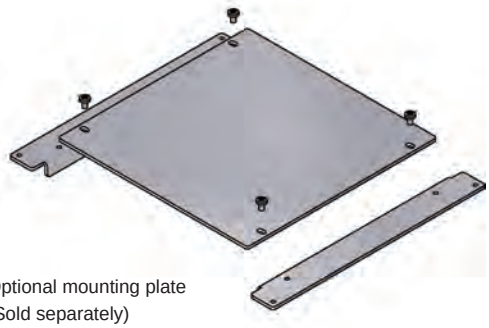

Optional mounting plate
(Sold separately)

Components

No.	Part name	Pcs	Material	Color / Finish
1	Corner block	4	Diecast aluminium ADC12	Silver • Black / Painted (Unfinished inside)
2	Frame	2	Extruded aluminium A6063S-T5	Silver / Painted (Unfinished inside)
3	Panel support frame	4	Extruded aluminium A6063S-T5	Silver / Painted (Unfinished inside)
4	Panel	2	Aluminium A1100P	Silver / Painted (Conductive inside)
5	Top cover	1	Aluminium A1100P	Silver / Painted (Conductive inside)
6	Bottom cover	1	Aluminium A1100P	Silver / Painted (Conductive inside)
7	Rubber feet : Aluminium feet	4	TPE (Elastomer) : Aluminium	Black : Silver / Anodized

AUP dimensions

■ DXF/DWG/PDF/STP drawings available on our website.

■ Feet is selectable between rubber or aluminium type.
※Rubber and aluminium feet height are different.

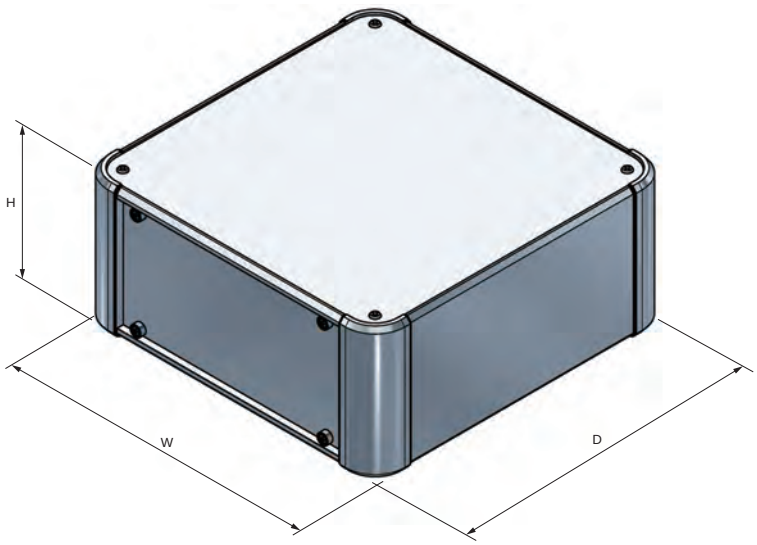

Rubber Feet

Aluminium Feet

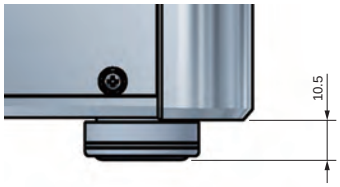

■ Mounting of a PCB or optional mounting plate is made easy through the use of the through-holes inside the aluminium diecast corner block.
See page 180 for how to install mounting plate.

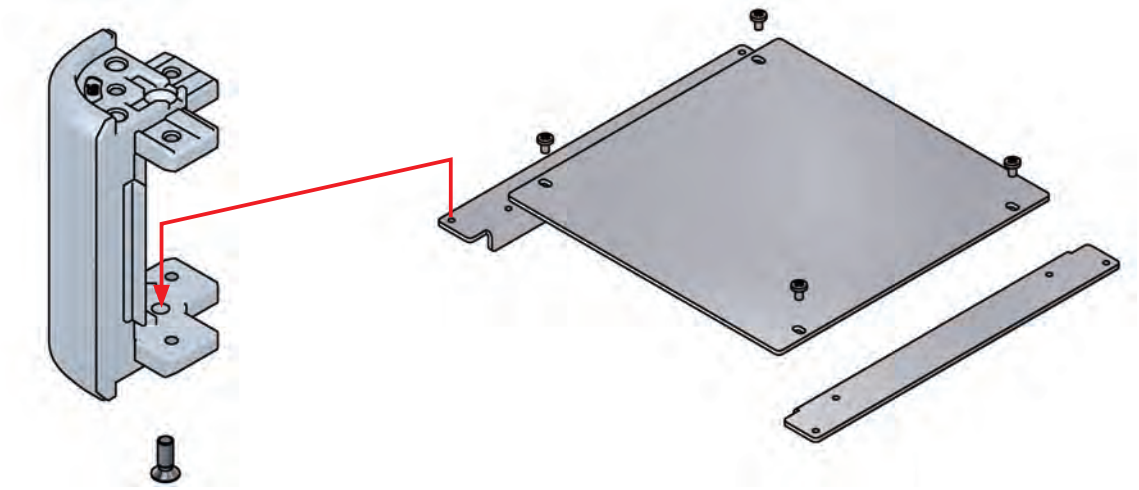

Accessories (Optional parts)

Mounting plate AUC series
See page 179 ~ 180

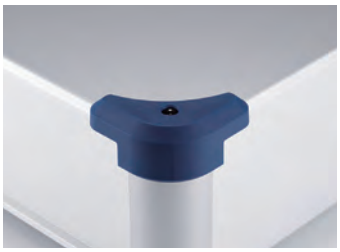

Corner guard AUCG series
See page 180

Elastomer carrying handle FM200
See website

Tilt leg TLW series
See page 222

To select Feet/Screw/Color types, follow steps 1 ~ 3 below.

1 Feet Type

R Rubber (Black / Unfinished)

A Aluminium (Silver / Anodized)

2 Screw Type

P Plus (Silver / Nickel plated)

H Hex (Silver / Nickel plated)

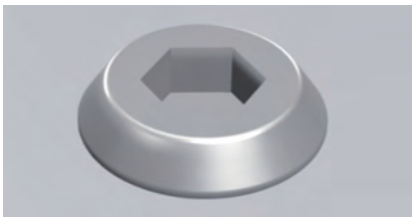

Hex wrench included.

3 Color Type

Please choose from the color combinations listed below.

S S

S B

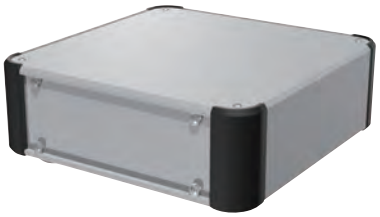

To determine a product number, suffix Feet/Screw/Color code at the end of product number.

Product Number

AUP □ - □ - □ □ □ - □ □

H-W-D dimensions

See page 158 for dimensions and product no.

1 Feet: R or A

2 Screw: P or H

3 Color: SS • SB

Numbering example :
If looking at "H88 x W300 x D200mm, Feet type A, Screw type H, Color type SB"

➡ AUP 88-30-20 AH-SB

Product no. / Dimensions

■ Please suffix feet, screw, and color code at the end of the product number

Product no.	H	W	D	Weight (kg)
AUP 66-16-16□□-□□	66	160	160	0.9
AUP 66-16-20□□-□□	66	160	200	1.0
AUP 66-16-25□□-□□	66	160	250	1.2
AUP 66-16-30□□-□□	66	160	300	1.3
AUP 66-20-16□□-□□	66	200	160	1.0
AUP 66-20-20□□-□□	66	200	200	1.2
AUP 66-20-25□□-□□	66	200	250	1.4
AUP 66-20-30□□-□□	66	200	300	1.5
AUP 66-20-36□□-□□	66	200	360	1.7
AUP 66-20-43□□-□□	66	200	430	2.0
AUP 66-25-16□□-□□	66	250	160	1.2
AUP 66-25-20□□-□□	66	250	200	1.4
AUP 66-25-25□□-□□	66	250	250	1.6
AUP 66-25-30□□-□□	66	250	300	1.8
AUP 66-25-36□□-□□	66	250	360	2.0
AUP 66-25-43□□-□□	66	250	430	2.3
AUP 66-30-16□□-□□	66	300	160	1.4
AUP 66-30-20□□-□□	66	300	200	1.5
AUP 66-30-25□□-□□	66	300	250	1.8
AUP 66-30-30□□-□□	66	300	300	2.0
AUP 66-30-36□□-□□	66	300	360	2.3
AUP 66-30-43□□-□□	66	300	430	2.6
AUP 66-30-50□□-□□	66	300	500	3.0
AUP 66-36-20□□-□□	66	360	200	1.8
AUP 66-36-25□□-□□	66	360	250	2.0
AUP 66-36-30□□-□□	66	360	300	2.3
AUP 66-36-36□□-□□	66	360	360	2.6
AUP 66-36-43□□-□□	66	360	430	3.0
AUP 66-36-50□□-□□	66	360	500	3.4
AUP 66-43-20□□-□□	66	430	200	2.1
AUP 66-43-25□□-□□	66	430	250	2.4
AUP 66-43-30□□-□□	66	430	300	2.7
AUP 66-43-36□□-□□	66	430	360	3.0
AUP 66-43-43□□-□□	66	430	430	3.4
AUP 66-43-50□□-□□	66	430	500	3.9
AUP 66-50-30□□-□□	66	500	300	3.0
AUP 66-50-36□□-□□	66	500	360	3.4
AUP 66-50-43□□-□□	66	500	430	3.9
AUP 66-50-50□□-□□	66	500	500	4.3
AUP 88-16-16□□-□□	88	160	160	1.0
AUP 88-16-20□□-□□	88	160	200	1.2
AUP 88-16-25□□-□□	88	160	250	1.3
AUP 88-16-30□□-□□	88	160	300	1.5
AUP 88-20-16□□-□□	88	200	160	1.2
AUP 88-20-20□□-□□	88	200	200	1.3
AUP 88-20-25□□-□□	88	200	250	1.5
AUP 88-20-30□□-□□	88	200	300	1.7
AUP 88-20-36□□-□□	88	200	360	1.9
AUP 88-20-43□□-□□	88	200	430	2.2
AUP 88-25-16□□-□□	88	250	160	1.3
AUP 88-25-20□□-□□	88	250	200	1.5
AUP 88-25-25□□-□□	88	250	250	1.7
AUP 88-25-30□□-□□	88	250	300	1.9
AUP 88-25-36□□-□□	88	250	360	2.2
AUP 88-25-43□□-□□	88	250	430	2.5
AUP 88-30-16□□-□□	88	300	160	1.5
AUP 88-30-20□□-□□	88	300	200	1.7
AUP 88-30-25□□-□□	88	300	250	1.9
AUP 88-30-30□□-□□	88	300	300	2.2
AUP 88-30-36□□-□□	88	300	360	2.5
AUP 88-30-43□□-□□	88	300	430	2.9
AUP 88-30-50□□-□□	88	300	500	3.2
AUP 88-36-20□□-□□	88	360	200	1.9
AUP 88-36-25□□-□□	88	360	250	2.2
AUP 88-36-30□□-□□	88	360	300	2.5
AUP 88-36-36□□-□□	88	360	360	2.8
AUP 88-36-43□□-□□	88	360	430	3.2
AUP 88-36-50□□-□□	88	360	500	3.6
AUP 88-43-20□□-□□	88	430	200	2.2
AUP 88-43-25□□-□□	88	430	250	2.5
AUP 88-43-30□□-□□	88	430	300	2.9
AUP 88-43-36□□-□□	88	430	360	3.2
AUP 88-43-43□□-□□	88	430	430	3.7
AUP 88-43-50□□-□□	88	430	500	4.1
AUP 88-50-30□□-□□	88	500	300	3.2
AUP 88-50-36□□-□□	88	500	360	3.6
AUP 88-50-43□□-□□	88	500	430	4.1
AUP 88-50-50□□-□□	88	500	500	4.6
AUP133-16-16□□-□□	132.5	160	160	1.3
AUP133-16-20□□-□□	132.5	160	200	1.4
AUP133-16-25□□-□□	132.5	160	250	1.7
AUP133-16-30□□-□□	132.5	160	300	1.9
AUP133-20-16□□-□□	132.5	200	160	1.4
AUP133-20-20□□-□□	132.5	200	200	1.6
AUP133-20-25□□-□□	132.5	200	250	1.8
AUP133-20-30□□-□□	132.5	200	300	2.1
AUP133-20-36□□-□□	132.5	200	360	2.4
AUP133-20-43□□-□□	132.5	200	430	2.7
AUP133-25-16□□-□□	132.5	250	160	1.6
AUP133-25-20□□-□□	132.5	250	200	1.8
AUP133-25-25□□-□□	132.5	250	250	2.1
AUP133-25-30□□-□□	132.5	250	300	2.4
AUP133-25-36□□-□□	132.5	250	360	2.7
AUP133-25-43□□-□□	132.5	250	430	3.1
AUP133-30-16□□-□□	132.5	300	160	1.8
AUP133-30-20□□-□□	132.5	300	200	2.0
AUP133-30-25□□-□□	132.5	300	250	2.3
AUP133-30-30□□-□□	132.5	300	300	2.6
AUP133-30-36□□-□□	132.5	300	360	3.0
AUP133-30-43□□-□□	132.5	300	430	3.4
AUP133-30-50□□-□□	132.5	300	500	3.8
AUP133-36-20□□-□□	132.5	360	200	2.3
AUP133-36-25□□-□□	132.5	360	250	2.6
AUP133-36-30□□-□□	132.5	360	300	3.0
AUP133-36-36□□-□□	132.5	360	360	3.3
AUP133-36-43□□-□□	132.5	360	430	3.8
AUP133-36-50□□-□□	132.5	360	500	4.3
AUP133-43-20□□-□□	132.5	430	200	2.6
AUP133-43-25□□-□□	132.5	430	250	3.0
AUP133-43-30□□-□□	132.5	430	300	3.4
AUP133-43-36□□-□□	132.5	430	360	3.8
AUP133-43-43□□-□□	132.5	430	430	4.3
AUP133-43-50□□-□□	132.5	430	500	4.8
AUP133-50-30□□-□□	132.5	500	300	3.8
AUP133-50-36□□-□□	132.5	500	360	4.2
AUP133-50-43□□-□□	132.5	500	430	4.8
AUP133-50-50□□-□□	132.5	500	500	5.3

*Weight listed is calculated based on rubber feet selection.

AUPE series EMC SHIELDED ENCLOSURE with DETACHABLE PANELS

NEW

EMC Shielding Effects

- Elegantly designed EMC shielded aluminium enclosure with detachable front/rear panels.
- Suitable to be used as an easy maintenance desktop case due to its detachable front/rear panels.
  Captive screws allow for ease of maintenance as there is little risk of the screws dropping out and getting lost.
- A large selection of 117 different sizes to choose from.

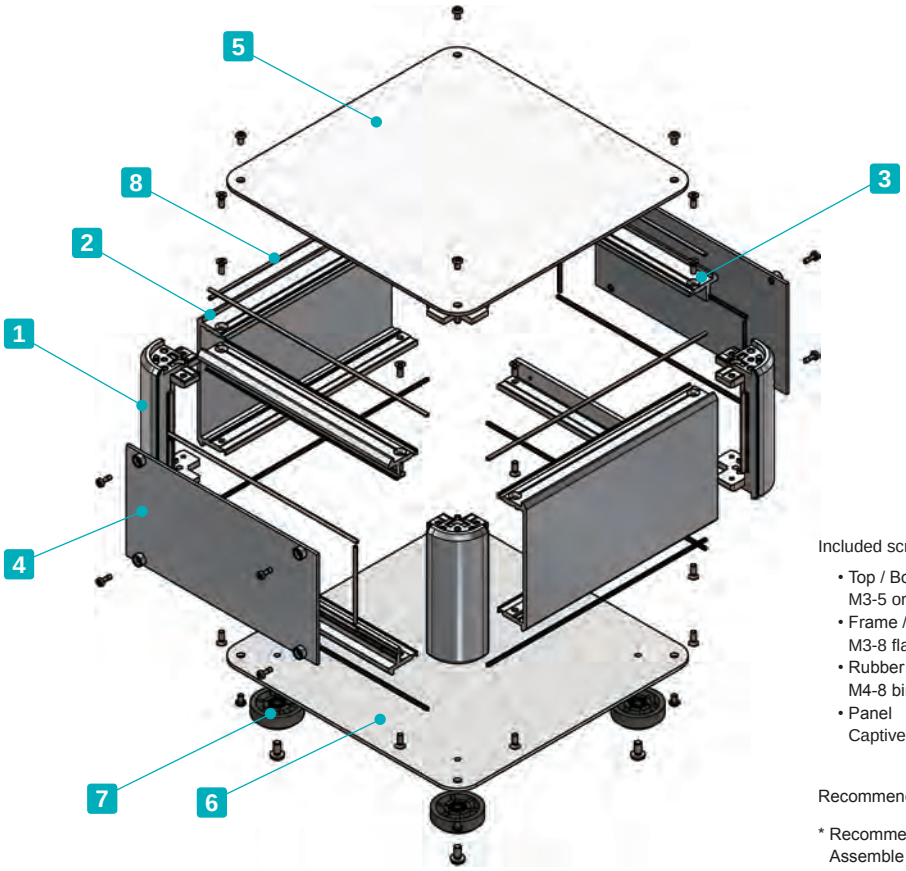

Included screws

- Top / Bottom cover
  M3-5 original trapezoid head (plus / hex) & Nickel plated x 8~16 pcs
- Frame / Panel support frame
  M3-8 flat head & Nickel plated x 16 pcs
- Rubber feet / Aluminium feet
  M4-8 bind head & Black trivalent chromate x 4 pcs
- Panel
  Captive M2.5-7 pan head & Nickel plated x 8 ~ 12 pcs

Recommended torque : M2.5 - 0.15 ~ 0.2N • m
M3 / M4 - 0.3 ~ 0.6N • m

* Recommended torque listed is for reference only; actual may differ.
Assemble after testing torque.

Components

No.	Part name	Pcs	Material	Color / Finish
1	Corner block	4	Diecast aluminium ADC12	Silver • Black / Painted (Unfinished inside)
2	Frame	2	Extruded aluminium A6063S-T5	Silver / Painted (Unfinished inside)
3	Panel support frame	4	Extruded aluminium A6063S-T5	Silver / Painted (Unfinished inside)
4	Panel	2	Aluminium A1100P	Silver / Painted (Conductive inside)
5	Top cover	1	Aluminium A1100P	Silver / Painted (Conductive inside)
6	Bottom cover	1	Aluminium A1100P	Silver / Painted (Conductive inside)
7	Rubber feet : Aluminium feet	4	TPE (Elastomer) : Aluminium	Black : Silver / Anodized
8	EMC shielding gasket	16	Conductive fiber UL94V-0	Metallic gray

AUPE dimensions

■ DXF/DWG/PDF/STP drawings available on our website.

■ Feet is selectable between rubber or aluminium type.
※Rubber and aluminium feet height are different.

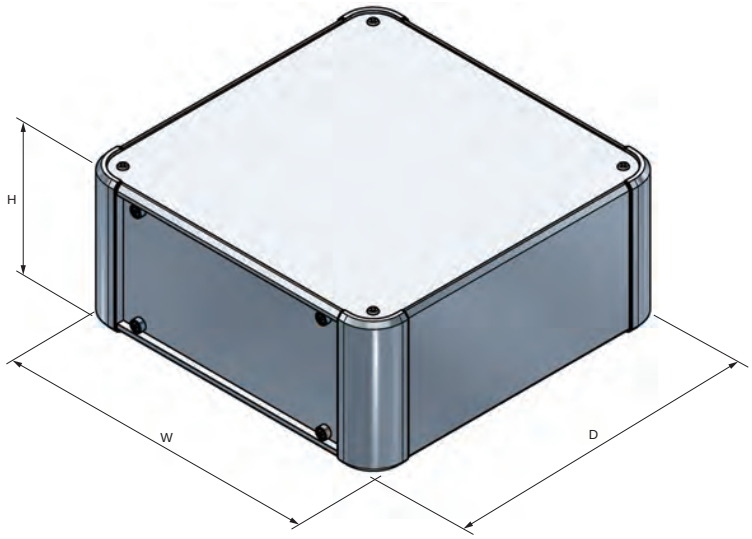

Rubber Feet

Aluminium Feet

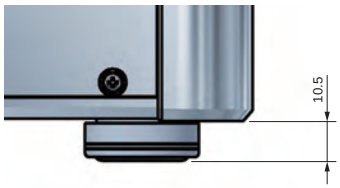

■ Install the EMC shielding gasket into the grooves on the frame, panel support frame, and corner block.

Frame

Panel support frame

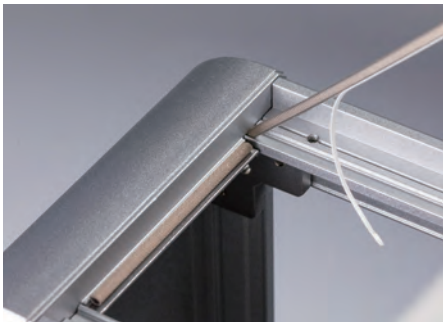

Corner block

Accessories (Optional parts)

Mounting plate AUC series
See page 179 ~ 180

Elastomer carrying handle FM200
See website

Tilt leg TLW series
See page 222

EMC shielding fan filter EMF series
See website

To select Feet/Screw/Color types, follow steps 1 ~ 3 below.

1 Feet Type

R Rubber (Black / Unfinished)

A Aluminium (Silver / Anodized)

2 Screw Type

P Plus (Silver / Nickel plated)

H Hex (Silver / Nickel plated)

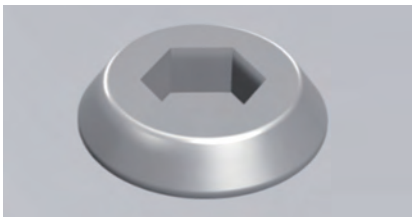

Hex wrench included.

3 Color Type

Please choose from the color combinations listed below.

S S

S B

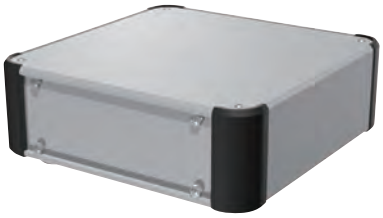

To determine a product number, suffix Feet/Screw/Color code at the end of product number.

Product Number

AUPE □ - □ - □ □□ - □□

H-W-D dimensions	1 Feet	2 Screw	3 Color
See page 162 for dimensions / product no.	R or A	P or H	SS • SB

Numbering example :
If looking at "H133 x W300 x D200mm, Feet type A, Screw type H, Color type SS"

➡ AUPE 133-30-20 AH-SS

Product no. / Dimensions

■ Please suffix feet, screw, and color code at the end of the product number

Product no.	H	W	D	Weight (kg)
AUPE 66-16-16□□-□□	66	160	160	0.9
AUPE 66-16-20□□-□□	66	160	200	1.0
AUPE 66-16-25□□-□□	66	160	250	1.2
AUPE 66-16-30□□-□□	66	160	300	1.4
AUPE 66-20-16□□-□□	66	200	160	1.0
AUPE 66-20-20□□-□□	66	200	200	1.2
AUPE 66-20-25□□-□□	66	200	250	1.4
AUPE 66-20-30□□-□□	66	200	300	1.5
AUPE 66-20-36□□-□□	66	200	360	1.8
AUPE 66-20-43□□-□□	66	200	430	2.0
AUPE 66-25-16□□-□□	66	250	160	1.2
AUPE 66-25-20□□-□□	66	250	200	1.4
AUPE 66-25-25□□-□□	66	250	250	1.6
AUPE 66-25-30□□-□□	66	250	300	1.8
AUPE 66-25-36□□-□□	66	250	360	2.0
AUPE 66-25-43□□-□□	66	250	430	2.3
AUPE 66-30-16□□-□□	66	300	160	1.4
AUPE 66-30-20□□-□□	66	300	200	1.6
AUPE 66-30-25□□-□□	66	300	250	1.8
AUPE 66-30-30□□-□□	66	300	300	2.0
AUPE 66-30-36□□-□□	66	300	360	2.3
AUPE 66-30-43□□-□□	66	300	430	2.6
AUPE 66-30-50□□-□□	66	300	500	3.0
AUPE 66-36-20□□-□□	66	360	200	1.8
AUPE 66-36-25□□-□□	66	360	250	2.0
AUPE 66-36-30□□-□□	66	360	300	2.3
AUPE 66-36-36□□-□□	66	360	360	2.6
AUPE 66-36-43□□-□□	66	360	430	3.0
AUPE 66-36-50□□-□□	66	360	500	3.4
AUPE 66-43-20□□-□□	66	430	200	2.1
AUPE 66-43-25□□-□□	66	430	250	2.4
AUPE 66-43-30□□-□□	66	430	300	2.7
AUPE 66-43-36□□-□□	66	430	360	3.0
AUPE 66-43-43□□-□□	66	430	430	3.4
AUPE 66-43-50□□-□□	66	430	500	3.9
AUPE 66-50-30□□-□□	66	500	300	3.0
AUPE 66-50-36□□-□□	66	500	360	3.4
AUPE 66-50-43□□-□□	66	500	430	3.9
AUPE 66-50-50□□-□□	66	500	500	4.3
AUPE 88-16-16□□-□□	88	160	160	1.0
AUPE 88-16-20□□-□□	88	160	200	1.2
AUPE 88-16-25□□-□□	88	160	250	1.3
AUPE 88-16-30□□-□□	88	160	300	1.5
AUPE 88-20-16□□-□□	88	200	160	1.2
AUPE 88-20-20□□-□□	88	200	200	1.3
AUPE 88-20-25□□-□□	88	200	250	1.5
AUPE 88-20-30□□-□□	88	200	300	1.7
AUPE 88-20-36□□-□□	88	200	360	1.9
AUPE 88-20-43□□-□□	88	200	430	2.2
AUPE 88-25-16□□-□□	88	250	160	1.3
AUPE 88-25-20□□-□□	88	250	200	1.5
AUPE 88-25-25□□-□□	88	250	250	1.7
AUPE 88-25-30□□-□□	88	250	300	1.9
AUPE 88-25-36□□-□□	88	250	360	2.2
AUPE 88-25-43□□-□□	88	250	430	2.5
AUPE 88-30-16□□-□□	88	300	160	1.5
AUPE 88-30-20□□-□□	88	300	200	1.7
AUPE 88-30-25□□-□□	88	300	250	1.9
AUPE 88-30-30□□-□□	88	300	300	2.2

Product no.	H	W	D	Weight (kg)
AUPE 88-30-36□□-□□	88	300	360	2.5
AUPE 88-30-43□□-□□	88	300	430	2.9
AUPE 88-30-50□□-□□	88	300	500	3.2
AUPE 88-36-20□□-□□	88	360	200	1.9
AUPE 88-36-25□□-□□	88	360	250	2.2
AUPE 88-36-30□□-□□	88	360	300	2.5
AUPE 88-36-36□□-□□	88	360	360	2.8
AUPE 88-36-43□□-□□	88	360	430	3.2
AUPE 88-36-50□□-□□	88	360	500	3.6
AUPE 88-43-20□□-□□	88	430	200	2.2
AUPE 88-43-25□□-□□	88	430	250	2.6
AUPE 88-43-30□□-□□	88	430	300	2.9
AUPE 88-43-36□□-□□	88	430	360	3.3
AUPE 88-43-43□□-□□	88	430	430	3.7
AUPE 88-43-50□□-□□	88	430	500	4.1
AUPE 88-50-30□□-□□	88	500	300	3.2
AUPE 88-50-36□□-□□	88	500	360	3.6
AUPE 88-50-43□□-□□	88	500	430	4.1
AUPE 88-50-50□□-□□	88	500	500	4.6
AUPE133-16-16□□-□□	132.5	160	160	1.3
AUPE133-16-20□□-□□	132.5	160	200	1.4
AUPE133-16-25□□-□□	132.5	160	250	1.7
AUPE133-16-30□□-□□	132.5	160	300	1.9
AUPE133-20-16□□-□□	132.5	200	160	1.4
AUPE133-20-20□□-□□	132.5	200	200	1.6
AUPE133-20-25□□-□□	132.5	200	250	1.9
AUPE133-20-30□□-□□	132.5	200	300	2.1
AUPE133-20-36□□-□□	132.5	200	360	2.4
AUPE133-20-43□□-□□	132.5	200	430	2.7
AUPE133-25-16□□-□□	132.5	250	160	1.6
AUPE133-25-20□□-□□	132.5	250	200	1.8
AUPE133-25-25□□-□□	132.5	250	250	2.1
AUPE133-25-30□□-□□	132.5	250	300	2.4
AUPE133-25-36□□-□□	132.5	250	360	2.7
AUPE133-25-43□□-□□	132.5	250	430	3.1
AUPE133-30-16□□-□□	132.5	300	160	1.8
AUPE133-30-20□□-□□	132.5	300	200	2.1
AUPE133-30-25□□-□□	132.5	300	250	2.3
AUPE133-30-30□□-□□	132.5	300	300	2.6
AUPE133-30-36□□-□□	132.5	300	360	3.0
AUPE133-30-43□□-□□	132.5	300	430	3.4
AUPE133-30-50□□-□□	132.5	300	500	3.8
AUPE133-36-20□□-□□	132.5	360	200	2.3
AUPE133-36-25□□-□□	132.5	360	250	2.6
AUPE133-36-30□□-□□	132.5	360	300	3.0
AUPE133-36-36□□-□□	132.5	360	360	3.4
AUPE133-36-43□□-□□	132.5	360	430	3.8
AUPE133-36-50□□-□□	132.5	360	500	4.3
AUPE133-43-20□□-□□	132.5	430	200	2.7
AUPE133-43-25□□-□□	132.5	430	250	3.0
AUPE133-43-30□□-□□	132.5	430	300	3.4
AUPE133-43-36□□-□□	132.5	430	360	3.8
AUPE133-43-43□□-□□	132.5	430	430	4.3
AUPE133-43-50□□-□□	132.5	430	500	4.8
AUPE133-50-30□□-□□	132.5	500	300	3.8
AUPE133-50-36□□-□□	132.5	500	360	4.2
AUPE133-50-43□□-□□	132.5	500	430	4.8
AUPE133-50-50□□-□□	132.5	500	500	5.4

*Weight listed is calculated based on rubber feet selection.

AUX series ALUMINIUM CONTROL BOX

NEW

- Round corner designed aluminium control box with 4 extruded aluminium frames.
- A wide selection of 75 different sizes to choose from.
- Aluminium control box is suitable for use as industrial controller, machine controller, audio amplifier, power supply, and so on.
- Feet is selectable between adhesive rubber or aluminium type.

Included screws

- Top / Bottom cover
  M3-5 original trapezoid head (plus / hex) &
  Nickel plated / Black trivalent chromate x 8~16 pcs
- Frame
  M3-8 flat head & Nickel plated x 16 pcs
- Aluminium feet
  M4-8 bind head & Black trivalent chromate x 4 pcs

Redommended torque : 0.3 ~ 0.6N • m
* Recommended torque listed is for reference only; actual may differ
  Assemble after testing torque.

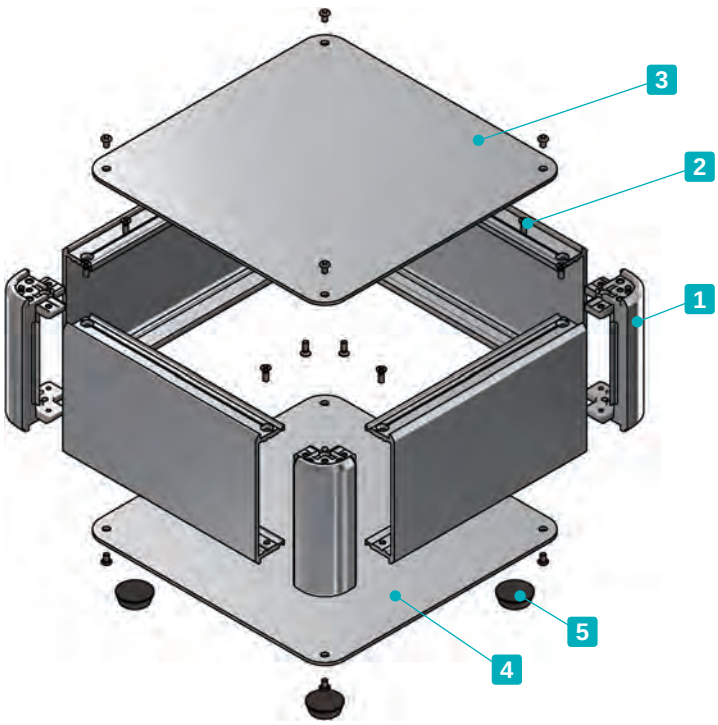

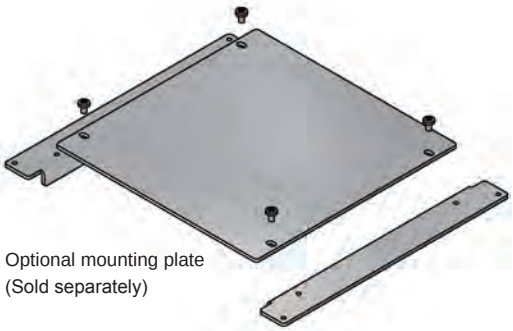

Optional mounting plate
(Sold separately)

Components

No.	Part name	Pcs	Material	Color / Finish
1	Corner block	4	Diecast aluminium ADC12	Silver • Black / Painted (Unfinished inside)
2	Frame	4	Extruded aluminium A6063S-T5	Silver • Black / Anodized
3	Top cover	1	Aluminium A1100P	Silver • Black / Anodized
4	Bottom cover	1	Aluminium A1100P	Silver • Black / Anodized
5	Adhesive Rubber feet : Aluminium feet	4	Synthetic rubber : Aluminium	Black : Silver • Black / Anodized

AUX dimensions

■ DXF/DWG/PDF/STP drawings available on our website.

■ Feet is selectable between rubber or aluminium type.
※Rubber and aluminium feet height are different.

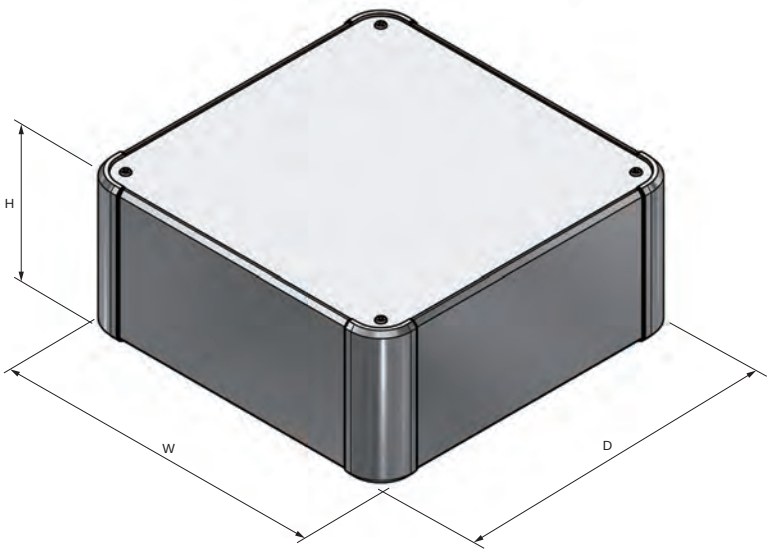

Rubber Feet

Aluminium Feet

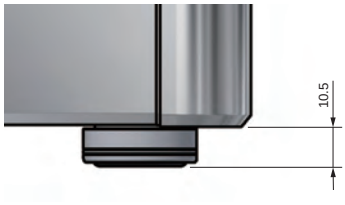

Accessories (Optional parts)

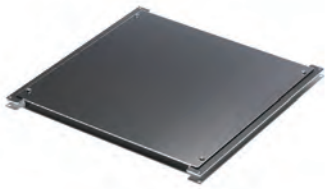

Mounting plate AUC series
See page 179 ~ 180

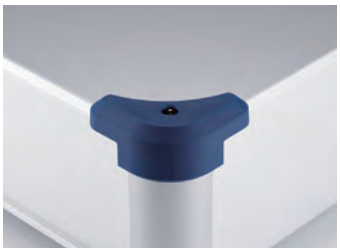

Corner guard AUCG series
See page 180

Elastomer carrying handle FM200
See website

Aluminium handle OH series
See website

Wall mount support arm MAR series
See page 181 ~ 182

To select Feet/Screw/Color types, follow steps 1 ~ 3 below.

1 Feet Type

*Color of "Aluminum feet" will be the same as bottom cover color.

R Adhesive Rubber (Black / Unfinished)

A Aluminium (Silver / Anodized) (Black / Anodized)

2 Screw Type

*Color of screw will be the same as top • bottom cover color.

P Plus (Silver / Nickel plated) (Black / Black trivalent chromate)

H Hex (Silver / Nickel plated) (Black / Black trivalent chromate)

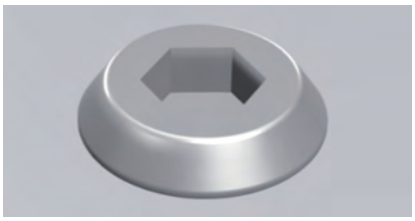

Hex wrench included.

3 Color Type

Please choose from the color combinations listed below.

S S

S B

B X

B B

To determine a product number, suffix Feet/Screw/Color code at the end of product number.

Product Number

AUX □ - □ - □ □ □ - □ □

H-W-D dimensions	1 Feet	2 Screw	3 Color
See page 166 for dimensions / product no.	R or A	P or H	SS • SB • BX • BB

Numbering example :
If looking at "H66 x W250 x D250mm, Feet type R, Screw type H, Color type BX"

➡ **AUX 66-25-25 RH-BX**

Product no. / Dimensions

■ Please suffix feet, screw, and color code at the end of the product number

Product no.	H	W	D	Weight (kg)
AUX 66-16-16□□-□□	66	160	160	0.9
AUX 66-20-16□□-□□	66	200	160	1.0
AUX 66-20-20□□-□□	66	200	200	1.1
AUX 66-25-16□□-□□	66	250	160	1.2
AUX 66-25-20□□-□□	66	250	200	1.3
AUX 66-25-25□□-□□	66	250	250	1.5
AUX 66-30-16□□-□□	66	300	160	1.3
AUX 66-30-20□□-□□	66	300	200	1.5
AUX 66-30-25□□-□□	66	300	250	1.7
AUX 66-30-30□□-□□	66	300	300	2.0
AUX 66-36-20□□-□□	66	360	200	1.7
AUX 66-36-25□□-□□	66	360	250	2.0
AUX 66-36-30□□-□□	66	360	300	2.2
AUX 66-36-36□□-□□	66	360	360	2.6
AUX 66-43-20□□-□□	66	430	200	2.0
AUX 66-43-25□□-□□	66	430	250	2.3
AUX 66-43-30□□-□□	66	430	300	2.6
AUX 66-43-36□□-□□	66	430	360	3.0
AUX 66-43-43□□-□□	66	430	430	3.4
AUX 66-50-30□□-□□	66	500	300	2.9
AUX 66-50-36□□-□□	66	500	360	3.3
AUX 66-50-43□□-□□	66	500	430	3.8
AUX 66-50-50□□-□□	66	500	500	4.3
AUX 66-60-36□□-□□	66	600	360	3.8
AUX 66-60-43□□-□□	66	600	430	4.4
AUX 88-16-16□□-□□	88	160	160	1.0
AUX 88-20-16□□-□□	88	200	160	1.1
AUX 88-20-20□□-□□	88	200	200	1.3
AUX 88-25-16□□-□□	88	250	160	1.3
AUX 88-25-20□□-□□	88	250	200	1.5
AUX 88-25-25□□-□□	88	250	250	1.7
AUX 88-30-16□□-□□	88	300	160	1.5
AUX 88-30-20□□-□□	88	300	200	1.7
AUX 88-30-25□□-□□	88	300	250	1.9
AUX 88-30-30□□-□□	88	300	300	2.2
AUX 88-36-20□□-□□	88	360	200	1.9
AUX 88-36-25□□-□□	88	360	250	2.2
AUX 88-36-30□□-□□	88	360	300	2.4
AUX 88-36-36□□-□□	88	360	360	2.8
AUX 88-43-20□□-□□	88	430	200	2.2
AUX 88-43-25□□-□□	88	430	250	2.5
AUX 88-43-30□□-□□	88	430	300	2.8
AUX 88-43-36□□-□□	88	430	360	3.2
AUX 88-43-43□□-□□	88	430	430	3.6
AUX 88-50-30□□-□□	88	500	300	3.2
AUX 88-50-36□□-□□	88	500	360	3.6
AUX 88-50-43□□-□□	88	500	430	4.1
AUX 88-50-50□□-□□	88	500	500	4.6
AUX 88-60-36□□-□□	88	600	360	4.1
AUX 88-60-43□□-□□	88	600	430	4.7

Product no.	H	W	D	Weight (kg)
AUX133-16-16□□-□□	132.5	160	160	1.3
AUX133-20-16□□-□□	132.5	200	160	1.5
AUX133-20-20□□-□□	132.5	200	200	1.7
AUX133-25-16□□-□□	132.5	250	160	1.7
AUX133-25-20□□-□□	132.5	250	200	1.9
AUX133-25-25□□-□□	132.5	250	250	2.2
AUX133-30-16□□-□□	132.5	300	160	1.9
AUX133-30-20□□-□□	132.5	300	200	2.1
AUX133-30-25□□-□□	132.5	300	250	2.4
AUX133-30-30□□-□□	132.5	300	300	2.7
AUX133-36-20□□-□□	132.5	360	200	2.4
AUX133-36-25□□-□□	132.5	360	250	2.7
AUX133-36-30□□-□□	132.5	360	300	3.1
AUX133-36-36□□-□□	132.5	360	360	3.4
AUX133-43-20□□-□□	132.5	430	200	2.8
AUX133-43-25□□-□□	132.5	430	250	3.1
AUX133-43-30□□-□□	132.5	430	300	3.5
AUX133-43-36□□-□□	132.5	430	360	3.9
AUX133-43-43□□-□□	132.5	430	430	4.4
AUX133-50-30□□-□□	132.5	500	300	3.9
AUX133-50-36□□-□□	132.5	500	360	4.4
AUX133-50-43□□-□□	132.5	500	430	4.9
AUX133-50-50□□-□□	132.5	500	500	5.5
AUX133-60-36□□-□□	132.5	600	360	5.0
AUX133-60-43□□-□□	132.5	600	430	5.7

*Weight listed is calculated based on rubber feet selection.

AUXE series EMC SHIELDED ALUMINIUM CONTROL BOX

NEW

EMC Shielding Effects

- Round corner designed aluminium enclosure with 4 extruded aluminium frames.
- Shielding gasket allows the enclosure to be EMC shielded.
- A wide selection of 75 different sizes to choose from.
- Feet is selectable between adhesive rubber or aluminium type.

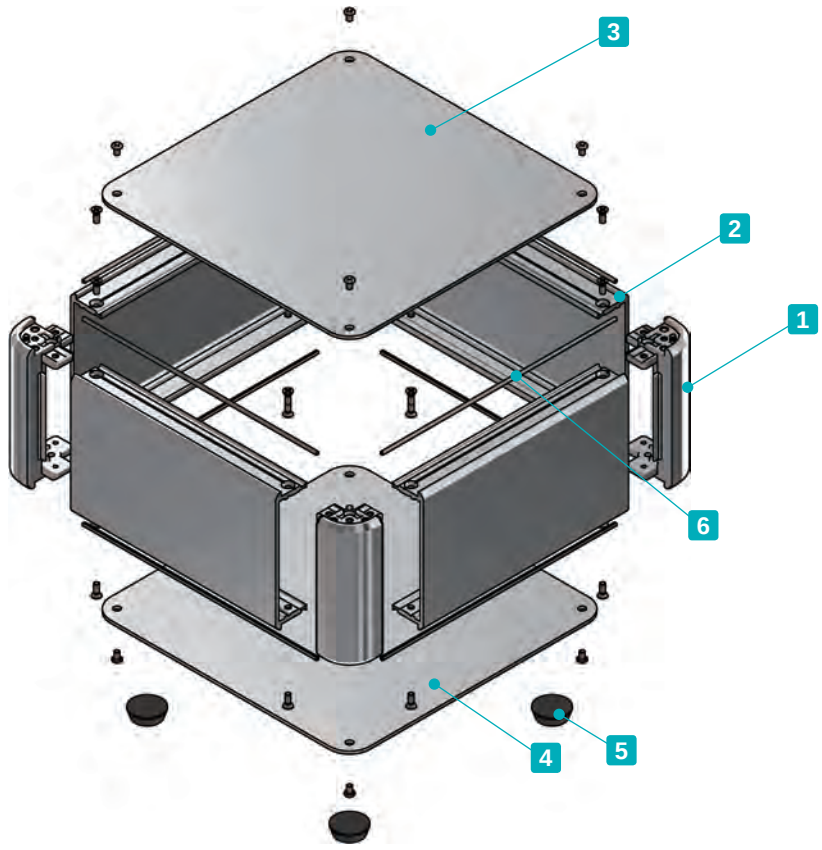

Included screws

- Top / Bottom cover
  M3-5 original trapezoid head (plus / hex) & Nickel plated x 8~16 pcs
- Frame
  M3-8 flat head & Nickel plated x 16 pcs
- Aluminium feet
  M4-8 bind head & Black trivalent chromate x 4 pcs

Recommended torque : 0.3 ~ 0.6N • m
* Recommended torque listed is for reference only; actual may differ.
Assemble after testing torque.

Components

No.	Part name	Pcs	Material	Color / Finish
1	Corner block	4	Diecast aluminium ADC12	Silver • Black / Painted (Unfinished inside)
2	Frame	4	Extruded aluminium A6063S-T5	Silver / Painted (Unfinished inside)
3	Top cover	1	Aluminium A1100P	Silver / Painted (Conductive inside)
4	Bottom cover	1	Aluminium A1100P	Silver / Painted (Conductive inside)
5	Adhesive Rubber feet : Aluminium feet	4	Synthetic rubber : Aluminium	Black : Silver / Anodized
6	EMC shielding gasket	8	Conductive fiber UL94V-0	Metallic gray

AUXE dimensions

■ DXF/DWG/PDF/STP drawings available on our website.

■ Feet is selectable between rubber or aluminium type.
※Rubber and aluminium feet height are different.

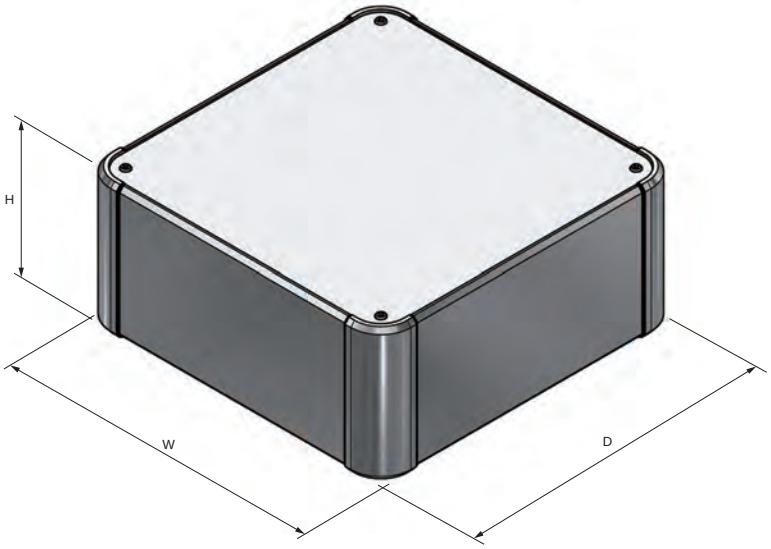

Rubber Feet

Aluminium Feet

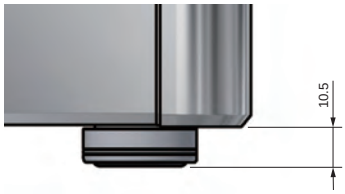

■ Install the EMC shielding gasket into the grooves on the frame and corner block.

Accessories (Optional parts)

Wall mount support arm MAR series
See page 181 ~ 182

Mounting plate AUC series
See page 179 ~ 180

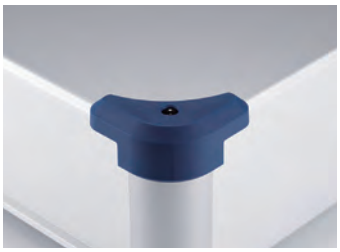

Corner guard AUCG series
See page 180

Elastomer carrying handle FM200
See website

Aluminium handle OH series
See website

To select Feet/Screw/Color types, follow steps 1 ~ 3 below.

1 Feet Type

R Adhesive Rubber (Black / Unfinished)

A Aluminium (Silver / Anodized)

2 Screw Type

P Plus (Silver / Nickel plated)

H Hex (Silver / Nickel plated)

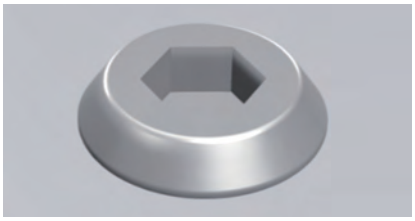

Hex wrench included.

3 Color Type

Please choose from the color combinations listed below.

S S

S B

To determine a product number, suffix Feet/Screw/Color code at the end of product number.

Product Number

AUXE □ - □ - □ □ □ - □ □

H-W-D dimensions	1 Feet	2 Screw	3 Color
See page 170 for dimensions / product no.	R or A	P or H	SS • SB

Numbering example :
If looking at "H133 x W300 x D300mm, Feet type R, Screw type P, Color type SB"

➡ **AUXE 133-30-30 RP-SB**

Product no. / Dimensions

■ Please suffix feet, screw, and color code at the end of the product number

Product no.	H	W	D	Weight (kg)
AUXE 66-16-16□□-□□	66	160	160	0.9
AUXE 66-20-16□□-□□	66	200	160	1.0
AUXE 66-20-20□□-□□	66	200	200	1.1
AUXE 66-25-16□□-□□	66	250	160	1.2
AUXE 66-25-20□□-□□	66	250	200	1.3
AUXE 66-25-25□□-□□	66	250	250	1.5
AUXE 66-30-16□□-□□	66	300	160	1.3
AUXE 66-30-20□□-□□	66	300	200	1.5
AUXE 66-30-25□□-□□	66	300	250	1.7
AUXE 66-30-30□□-□□	66	300	300	2.0
AUXE 66-36-20□□-□□	66	360	200	1.7
AUXE 66-36-25□□-□□	66	360	250	2.0
AUXE 66-36-30□□-□□	66	360	300	2.2
AUXE 66-36-36□□-□□	66	360	360	2.6
AUXE 66-43-20□□-□□	66	430	200	2.0
AUXE 66-43-25□□-□□	66	430	250	2.3
AUXE 66-43-30□□-□□	66	430	300	2.6
AUXE 66-43-36□□-□□	66	430	360	3.0
AUXE 66-43-43□□-□□	66	430	430	3.4
AUXE 66-50-30□□-□□	66	500	300	2.9
AUXE 66-50-36□□-□□	66	500	360	3.3
AUXE 66-50-43□□-□□	66	500	430	3.8
AUXE 66-50-50□□-□□	66	500	500	4.3
AUXE 66-60-36□□-□□	66	600	360	3.9
AUXE 66-60-43□□-□□	66	600	430	4.4
AUXE 88-16-16□□-□□	88	160	160	1.0
AUXE 88-20-16□□-□□	88	200	160	1.1
AUXE 88-20-20□□-□□	88	200	200	1.3
AUXE 88-25-16□□-□□	88	250	160	1.3
AUXE 88-25-20□□-□□	88	250	200	1.5
AUXE 88-25-25□□-□□	88	250	250	1.7
AUXE 88-30-16□□-□□	88	300	160	1.5
AUXE 88-30-20□□-□□	88	300	200	1.7
AUXE 88-30-25□□-□□	88	300	250	1.9
AUXE 88-30-30□□-□□	88	300	300	2.2
AUXE 88-36-20□□-□□	88	360	200	1.9
AUXE 88-36-25□□-□□	88	360	250	2.2
AUXE 88-36-30□□-□□	88	360	300	2.5
AUXE 88-36-36□□-□□	88	360	360	2.8
AUXE 88-43-20□□-□□	88	430	200	2.2
AUXE 88-43-25□□-□□	88	430	250	2.5
AUXE 88-43-30□□-□□	88	430	300	2.8
AUXE 88-43-36□□-□□	88	430	360	3.2
AUXE 88-43-43□□-□□	88	430	430	3.6
AUXE 88-50-30□□-□□	88	500	300	3.2
AUXE 88-50-36□□-□□	88	500	360	3.6
AUXE 88-50-43□□-□□	88	500	430	4.1
AUXE 88-50-50□□-□□	88	500	500	4.6
AUXE 88-60-36□□-□□	88	600	360	4.2
AUXE 88-60-43□□-□□	88	600	430	4.7

Product no.	H	W	D	Weight (kg)
AUXE133-16-16□□-□□	132.5	160	160	1.3
AUXE133-20-16□□-□□	132.5	200	160	1.5
AUXE133-20-20□□-□□	132.5	200	200	1.7
AUXE133-25-16□□-□□	132.5	250	160	1.7
AUXE133-25-20□□-□□	132.5	250	200	1.9
AUXE133-25-25□□-□□	132.5	250	250	2.2
AUXE133-30-16□□-□□	132.5	300	160	1.9
AUXE133-30-20□□-□□	132.5	300	200	2.1
AUXE133-30-25□□-□□	132.5	300	250	2.4
AUXE133-30-30□□-□□	132.5	300	300	2.7
AUXE133-36-20□□-□□	132.5	360	200	2.4
AUXE133-36-25□□-□□	132.5	360	250	2.7
AUXE133-36-30□□-□□	132.5	360	300	3.1
AUXE133-36-36□□-□□	132.5	360	360	3.5
AUXE133-43-20□□-□□	132.5	430	200	2.8
AUXE133-43-25□□-□□	132.5	430	250	3.1
AUXE133-43-30□□-□□	132.5	430	300	3.5
AUXE133-43-36□□-□□	132.5	430	360	3.9
AUXE133-43-43□□-□□	132.5	430	430	4.4
AUXE133-50-30□□-□□	132.5	500	300	3.9
AUXE133-50-36□□-□□	132.5	500	360	4.4
AUXE133-50-43□□-□□	132.5	500	430	5.0
AUXE133-50-50□□-□□	132.5	500	500	5.5
AUXE133-60-36□□-□□	132.5	600	360	5.0
AUXE133-60-43□□-□□	132.5	600	430	5.7

*Weight listed is calculated based on rubber feet selection.

AUG series ALUMINIUM ENCLOSURE with CORNER GUARD

NEW

- Rugged design aluminium enclosure with TPE (Elastomer) corner guards.
  Corner guards also act as non-slip rubber feet.
- A large selection of 117 different sizes to choose from.
- A total of 8 selectable color combinations with 4 corner guard colors - Black, Gray, Navy and Red - and 2 enclosure colors - Silver and Black anodized.
- Versatile aluminium case suitable for use as measuring instrument, controller, industrial embedded computer, power supply, audio amplifier, and so on.

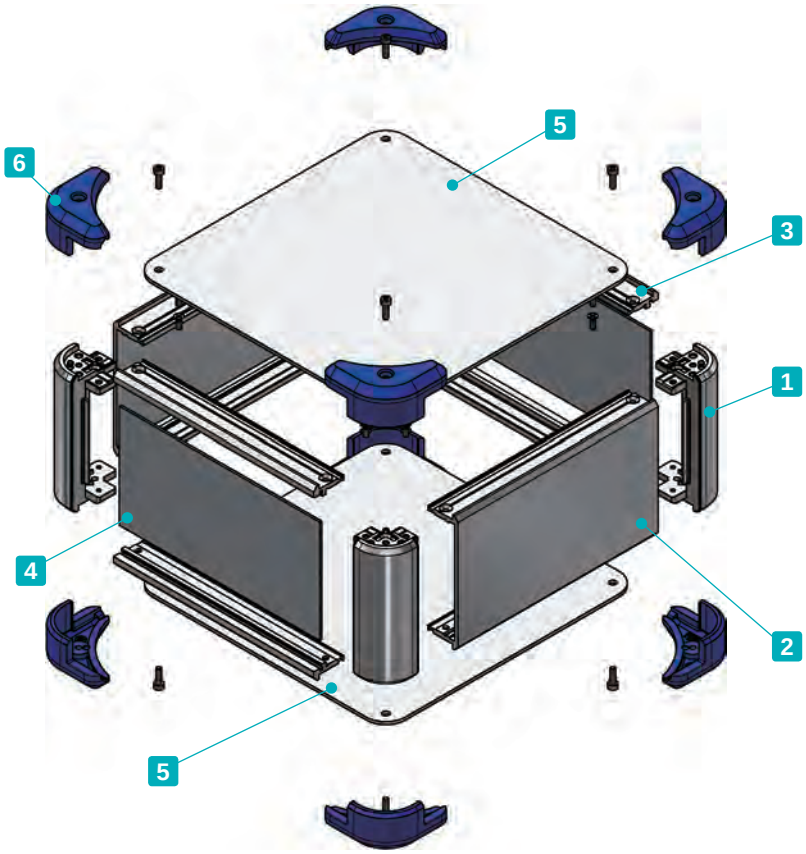

Included screws

- Top / Bottom cover (not applicable to some models)
  M3-5 original trapezoid head (hex) &
  Nickel plated / Black trivalent chromate x 4~8 pcs
- Frame / Panel support frame
  M3-8 flat head & Nickel plated x 16 pcs
- Corner guard
  M3-10 hex & Black trivalent chromate x 8 pcs
  * Hex wrench included.

Recommended torque : M3 -10 hex - 0.2N • m
Other screws - 0.3 ~ 0.6N • m

* Recommended torque listed is for reference only; actual may differ.
  Assemble after testing torque.

Components

No.	Part name	Pcs	Material	Color / Finish
1	Corner block	4	Diecast aluminium ADC12	Silver • Black / Painted (Unfinished inside)
2	Frame	2	Extruded aluminium A6063S-T5	Silver • Black / Anodized
3	Panel support frame	4	Extruded aluminium A6063S-T5	Silver • Black / Anodized
4	Panel	2	Aluminium A1100P	Silver • Black / Anodized
5	Top • bottom cover	2	Aluminium A1100P	Silver • Black / Anodized
6	Corner guard	8	TPE (Elastomer)	Black • Gray • Navy • Red

AUG dimensions

■ DXF/DWG/PDF/STP drawings available on our website.

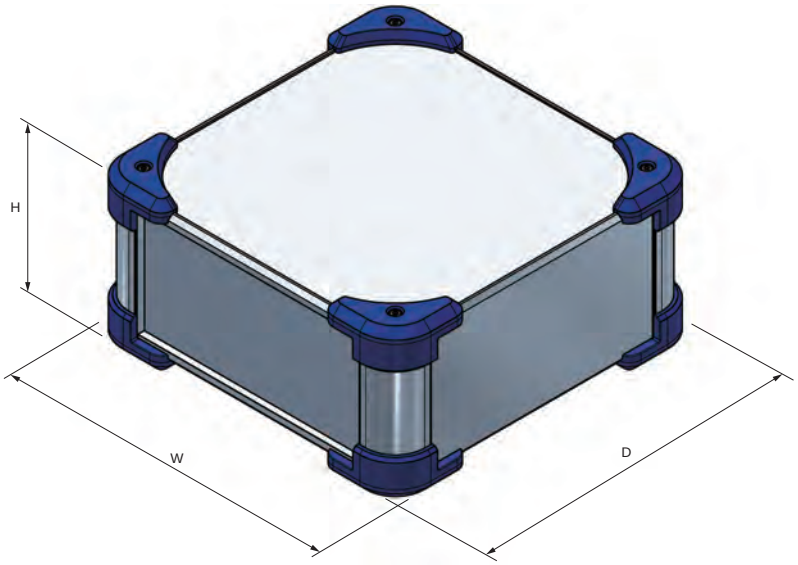

■ Mounting of a PCB or optional mounting plate is made easy through the use of the through-holes inside the aluminium diecast corner block.
See page 180 for how to install mounting plate.

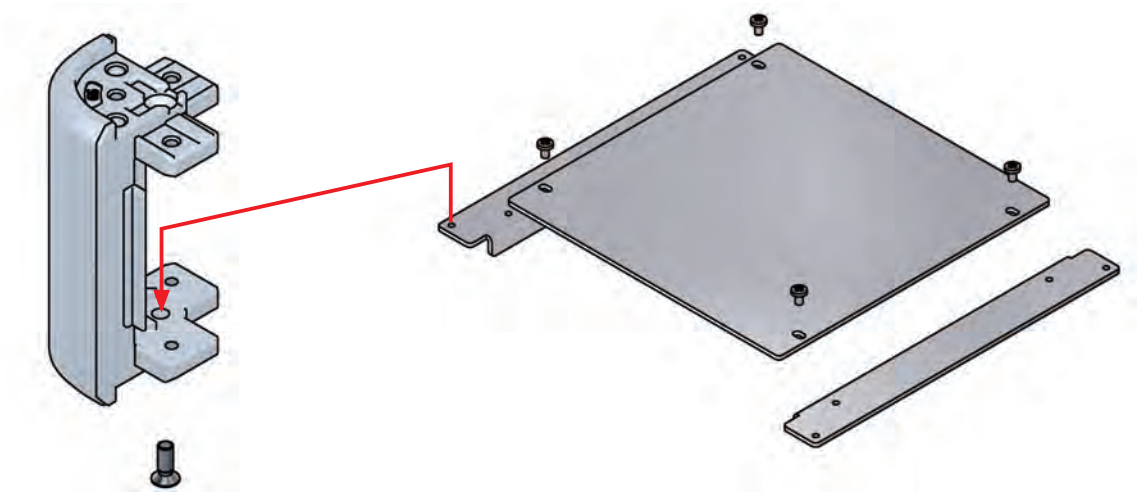

Accessories (Optional parts)

Mounting plate AUC series
See page 179 ~ 180

Elastomer carrying handle FM200
See website

Tilt leg TLW series
See page 222

Color Type

Please choose from the color combinations listed below.

S B (Silver / Black)

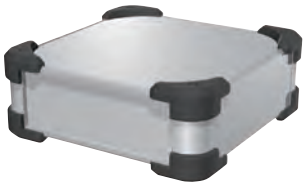

S G (Silver / Gray)

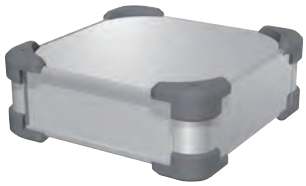

S N (Silver / Navy)

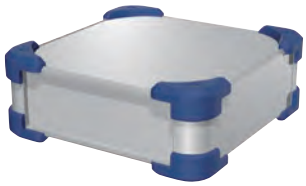

S R (Silver / Red)

B B (Black / Black)

B G (Black / Gray)

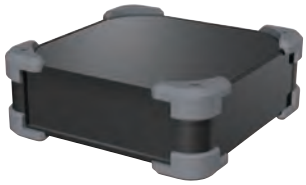

B N (Black / Navy)

B R (Black / Red)

Product Number To determine a product number, please suffix Color code at the end of product number.

AUG □ - □ - □ - □□

H-W-D dimensions

See page 174 for dimensions / product no.

Color

SB • SG • SN • SR
BB • BG • BN • BR

Numbering example :
If looking at "H88 x W308 x D208mm, Color type BR"

➡ **AUG 88-30-20-BR**

Product no. / Dimensions

■ Please suffix color code at the end of the product number.

Product no.	H	W	D	Weight (kg)
AUG 66-16-16-□□	78	168	168	0.9
AUG 66-16-20-□□	78	168	208	1.0
AUG 66-16-25-□□	78	168	258	1.2
AUG 66-16-30-□□	78	168	308	1.3
AUG 66-20-16-□□	78	208	168	1.0
AUG 66-20-20-□□	78	208	208	1.2
AUG 66-20-25-□□	78	208	258	1.3
AUG 66-20-30-□□	78	208	308	1.5
AUG 66-20-36-□□	78	208	368	1.7
AUG 66-20-43-□□	78	208	438	2.0
AUG 66-25-16-□□	78	258	168	1.2
AUG 66-25-20-□□	78	258	208	1.3
AUG 66-25-25-□□	78	258	258	1.5
AUG 66-25-30-□□	78	258	308	1.7
AUG 66-25-36-□□	78	258	368	2.0
AUG 66-25-43-□□	78	258	438	2.3
AUG 66-30-16-□□	78	308	168	1.3
AUG 66-30-20-□□	78	308	208	1.5
AUG 66-30-25-□□	78	308	258	1.7
AUG 66-30-30-□□	78	308	308	2.0
AUG 66-30-36-□□	78	308	368	2.2
AUG 66-30-43-□□	78	308	438	2.6
AUG 66-30-50-□□	78	308	508	2.9
AUG 66-36-20-□□	78	368	208	1.7
AUG 66-36-25-□□	78	368	258	2.0
AUG 66-36-30-□□	78	368	308	2.2
AUG 66-36-36-□□	78	368	368	2.5
AUG 66-36-43-□□	78	368	438	2.9
AUG 66-36-50-□□	78	368	508	3.3
AUG 66-43-20-□□	78	438	208	2.0
AUG 66-43-25-□□	78	438	258	2.3
AUG 66-43-30-□□	78	438	308	2.6
AUG 66-43-36-□□	78	438	368	2.9
AUG 66-43-43-□□	78	438	438	3.3
AUG 66-43-50-□□	78	438	508	3.8
AUG 66-50-30-□□	78	508	308	2.9
AUG 66-50-36-□□	78	508	368	3.3
AUG 66-50-43-□□	78	508	438	3.8
AUG 66-50-50-□□	78	508	508	4.2
AUG 88-16-16-□□	100	168	168	1.0
AUG 88-16-20-□□	100	168	208	1.1
AUG 88-16-25-□□	100	168	258	1.3
AUG 88-16-30-□□	100	168	308	1.5
AUG 88-20-16-□□	100	208	168	1.1
AUG 88-20-20-□□	100	208	208	1.3
AUG 88-20-25-□□	100	208	258	1.5
AUG 88-20-30-□□	100	208	308	1.7
AUG 88-20-36-□□	100	208	368	1.9
AUG 88-20-43-□□	100	208	438	2.2
AUG 88-25-16-□□	100	258	168	1.3
AUG 88-25-20-□□	100	258	208	1.5
AUG 88-25-25-□□	100	258	258	1.7
AUG 88-25-30-□□	100	258	308	1.9
AUG 88-25-36-□□	100	258	368	2.2
AUG 88-25-43-□□	100	258	438	2.5
AUG 88-30-16-□□	100	308	168	1.4
AUG 88-30-20-□□	100	308	208	1.6
AUG 88-30-25-□□	100	308	258	1.9
AUG 88-30-30-□□	100	308	308	2.1

Product no.	H	W	D	Weight (kg)
AUG 88-30-36-□□	100	308	368	2.4
AUG 88-30-43-□□	100	308	438	2.8
AUG 88-30-50-□□	100	308	508	3.1
AUG 88-36-20-□□	100	368	208	1.8
AUG 88-36-25-□□	100	368	258	2.1
AUG 88-36-30-□□	100	368	308	2.4
AUG 88-36-36-□□	100	368	368	2.7
AUG 88-36-43-□□	100	368	438	3.2
AUG 88-36-50-□□	100	368	508	3.5
AUG 88-43-20-□□	100	438	208	2.1
AUG 88-43-25-□□	100	438	258	2.4
AUG 88-43-30-□□	100	438	308	2.8
AUG 88-43-36-□□	100	438	368	3.1
AUG 88-43-43-□□	100	438	438	3.6
AUG 88-43-50-□□	100	438	508	4.0
AUG 88-50-30-□□	100	508	308	3.1
AUG 88-50-36-□□	100	508	368	3.5
AUG 88-50-43-□□	100	508	438	4.0
AUG 88-50-50-□□	100	508	508	4.5
AUG133-16-16-□□	144.5	168	168	1.2
AUG133-16-20-□□	144.5	168	208	1.4
AUG133-16-25-□□	144.5	168	258	1.6
AUG133-16-30-□□	144.5	168	308	1.8
AUG133-20-16-□□	144.5	208	168	1.4
AUG133-20-20-□□	144.5	208	208	1.6
AUG133-20-25-□□	144.5	208	258	1.8
AUG133-20-30-□□	144.5	208	308	2.0
AUG133-20-36-□□	144.5	208	368	2.3
AUG133-20-43-□□	144.5	208	438	2.7
AUG133-25-16-□□	144.5	258	168	1.5
AUG133-25-20-□□	144.5	258	208	1.8
AUG133-25-25-□□	144.5	258	258	2.0
AUG133-25-30-□□	144.5	258	308	2.3
AUG133-25-36-□□	144.5	258	368	2.6
AUG133-25-43-□□	144.5	258	438	3.0
AUG133-30-16-□□	144.5	308	168	1.7
AUG133-30-20-□□	144.5	308	208	2.0
AUG133-30-25-□□	144.5	308	258	2.2
AUG133-30-30-□□	144.5	308	308	2.5
AUG133-30-36-□□	144.5	308	368	2.9
AUG133-30-43-□□	144.5	308	438	3.3
AUG133-30-50-□□	144.5	308	508	3.7
AUG133-36-20-□□	144.5	368	208	2.2
AUG133-36-25-□□	144.5	368	258	2.5
AUG133-36-30-□□	144.5	368	308	2.8
AUG133-36-36-□□	144.5	368	368	3.2
AUG133-36-43-□□	144.5	368	438	3.7
AUG133-36-50-□□	144.5	368	508	4.2
AUG133-43-20-□□	144.5	438	208	2.5
AUG133-43-25-□□	144.5	438	258	2.9
AUG133-43-30-□□	144.5	438	308	3.2
AUG133-43-36-□□	144.5	438	368	3.6
AUG133-43-43-□□	144.5	438	438	4.2
AUG133-43-50-□□	144.5	438	508	4.7
AUG133-50-30-□□	144.5	508	308	3.6
AUG133-50-36-□□	144.5	508	368	4.0
AUG133-50-43-□□	144.5	508	438	4.6
AUG133-50-50-□□	144.5	508	508	5.2

AUGE series EMC SHIELDED ALUMINIUM ENCLOSURE with CORNER GUARD

NEW

EMC Shielding Effects

- Shielding gasket allows the enclosure to be EMC shielded.
- Rugged design EMC shielded aluminium enclosure with TPE (Elastomer) corner guards.
  Corner guards also act as non-slip rubber feet.
- Suitable to be used as an easy maintenance desktop case due to its detachable front/rear panels.
  Captive screws allow for ease of maintenance as there is little risk of the screws dropping out and getting lost.
- A large selection of 117 different sizes to choose from.
- A total of 4 selectable color combinations with a silver anodized body and 4 corner guard colors - Black, Gray, Navy and Red.

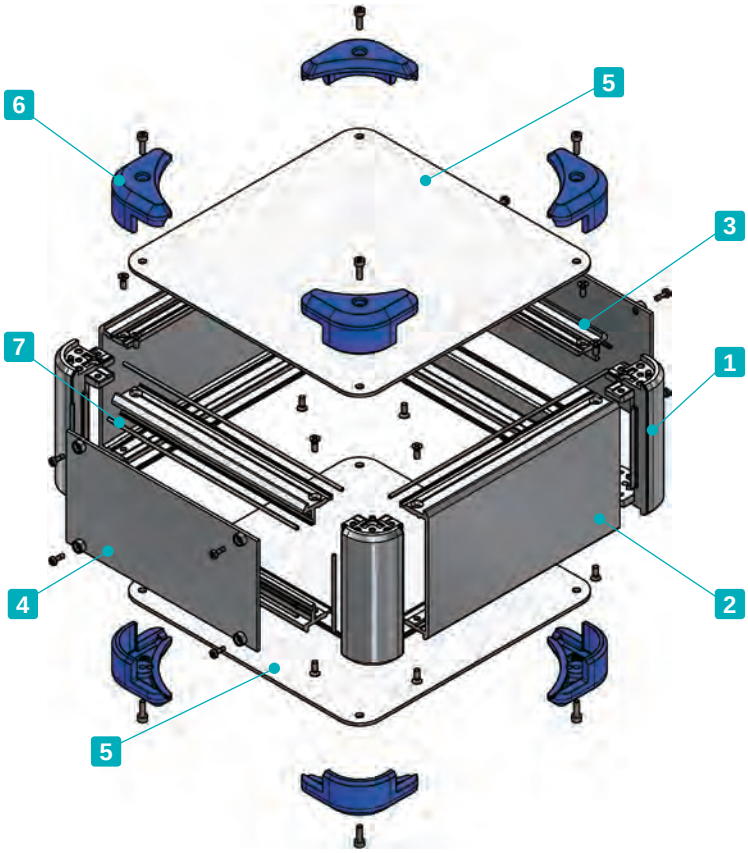

Included screws :

- Top / Bottom cover (not applicable to some models)
  M3-5 original trapezoid head (hex) & Nickel plated x 4~8 pcs
- Frame / Panel support frame
  M3-8 flat head & Nickel plated x 16 pcs
- Corner guard
  M3-10 hex & Black trivalent chromate x 8 pcs
  * Hex wrench included.
- Panel
  Captive M2.5-7 pan head & Nickel plated x 8~12 pcs

Recommended torque :
- M3 -10 hex - 0.2N • m
- M2.5-7 pan head - 0.15 ~ 0.2N • m
- Other screws - 0.3 ~ 0.6N • m

* Recommended torque listed is for reference only; actual may differ.
  Assemble after testing torque.

Components

No.	Part name	Pcs	Material	Color / Finish
1	Corner block	4	Diecast aluminium ADC12	Silver / Painted (Unfinished inside)
2	Frame	2	Extruded aluminium A6063S-T5	Silver / Painted (Unfinished inside)
3	Panel support frame	4	Extruded aluminium A6063S-T5	Silver / Painted (Unfinished inside)
4	Panel	2	Aluminium A1100P	Silver / Painted (Conductive inside)
5	Top • bottom cover	2	Aluminium A1100P	Silver / Painted (Conductive inside)
6	Corner guard	8	TPE (Elastomer)	Black • Gray • Navy • Red
7	EMC shielding gasket	16	Conductive fiber UL94V-0	Metallic gray

AUGE dimensions

■ DXF/DWG/PDF/STP drawings available on our website.

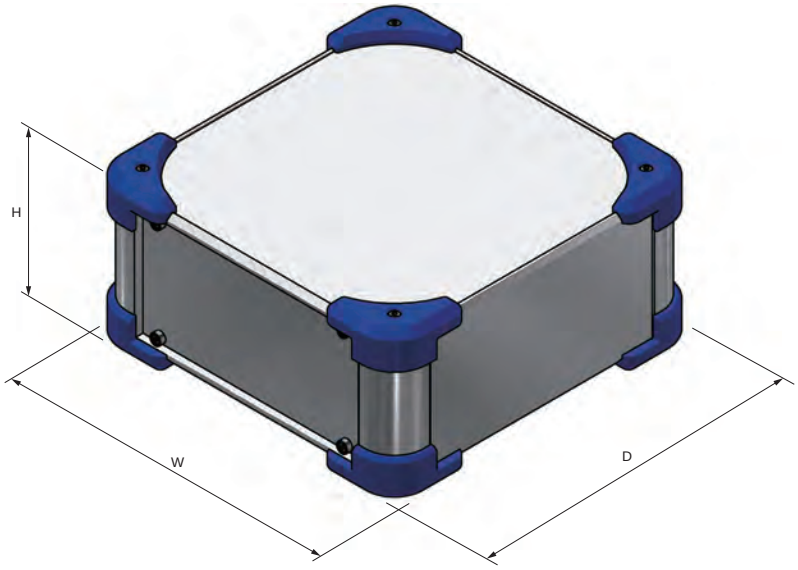

■ Install the EMC shielding gasket into the grooves on the frame, panel support frame, and corner block.

Frame

Panel support frame

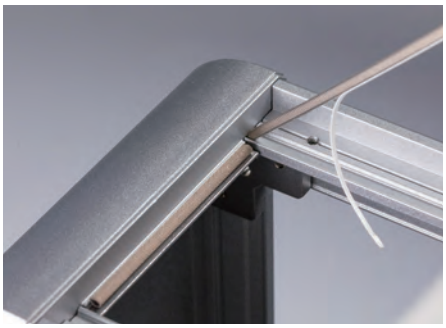

Corner block

Accessories (Optional parts)

Mounting plate AUC series
See page 179 ~ 180

Elastomer carrying handle FM200
See website

Tilt leg TLW series
See page 222

EMC shielding fan filter EMF series
See website

Color Type

Please choose from the color combinations listed below.

S B (Silver / Black)

S G (Silver / Gray)

S N (Silver / Navy)

S R (Silver / Red)

Product Number To determine a product number, please suffix Color code at the end of product number.

AUGE □ - □ - □ - □□

H-W-D dimensions

See page 178 for dimensions / product no.

Color

SB • SG • SN • SR

Numbering example :
If looking at "H133 x W438 x D308mm, Color type SN"

➡ **AUGE 133-43-30-SN**

Product no. / Dimensions

■ Please suffix color code at the end of the product number.

Product no.	H	W	D	Weight (kg)
AUGE 66-16-16-□□	78	168	168	0.9
AUGE 66-16-20-□□	78	168	208	1.1
AUGE 66-16-25-□□	78	168	258	1.2
AUGE 66-16-30-□□	78	168	308	1.4
AUGE 66-20-16-□□	78	208	168	1.1
AUGE 66-20-20-□□	78	208	208	1.2
AUGE 66-20-25-□□	78	208	258	1.4
AUGE 66-20-30-□□	78	208	308	1.6
AUGE 66-20-36-□□	78	208	368	1.8
AUGE 66-20-43-□□	78	208	438	2.1
AUGE 66-25-16-□□	78	258	168	1.2
AUGE 66-25-20-□□	78	258	208	1.4
AUGE 66-25-25-□□	78	258	258	1.6
AUGE 66-25-30-□□	78	258	308	1.8
AUGE 66-25-36-□□	78	258	368	2.0
AUGE 66-25-43-□□	78	258	438	2.4
AUGE 66-30-16-□□	78	308	168	1.4
AUGE 66-30-20-□□	78	308	208	1.6
AUGE 66-30-25-□□	78	308	258	1.8
AUGE 66-30-30-□□	78	308	308	2.0
AUGE 66-30-36-□□	78	308	368	2.3
AUGE 66-30-43-□□	78	308	438	2.7
AUGE 66-30-50-□□	78	308	508	3.0
AUGE 66-36-20-□□	78	368	208	1.8
AUGE 66-36-25-□□	78	368	258	2.1
AUGE 66-36-30-□□	78	368	308	2.3
AUGE 66-36-36-□□	78	368	368	2.6
AUGE 66-36-43-□□	78	368	438	3.0
AUGE 66-36-50-□□	78	368	508	3.4
AUGE 66-43-20-□□	78	438	208	2.1
AUGE 66-43-25-□□	78	438	258	2.4
AUGE 66-43-30-□□	78	438	308	2.7
AUGE 66-43-36-□□	78	438	368	3.0
AUGE 66-43-43-□□	78	438	438	3.5
AUGE 66-43-50-□□	78	438	508	3.9
AUGE 66-50-30-□□	78	508	308	3.0
AUGE 66-50-36-□□	78	508	368	3.4
AUGE 66-50-43-□□	78	508	438	3.9
AUGE 66-50-50-□□	78	508	508	4.4
AUGE 88-16-16-□□	100	168	168	1.0
AUGE 88-16-20-□□	100	168	208	1.2
AUGE 88-16-25-□□	100	168	258	1.4
AUGE 88-16-30-□□	100	168	308	1.5
AUGE 88-20-16-□□	100	208	168	1.2
AUGE 88-20-20-□□	100	208	208	1.3
AUGE 88-20-25-□□	100	208	258	1.5
AUGE 88-20-30-□□	100	208	308	1.7
AUGE 88-20-36-□□	100	208	368	1.9
AUGE 88-20-43-□□	100	208	438	2.2
AUGE 88-25-16-□□	100	258	168	1.4
AUGE 88-25-20-□□	100	258	208	1.5
AUGE 88-25-25-□□	100	258	258	1.7
AUGE 88-25-30-□□	100	258	308	2.0
AUGE 88-25-36-□□	100	258	368	2.2
AUGE 88-25-43-□□	100	258	438	2.6
AUGE 88-30-16-□□	100	308	168	1.5
AUGE 88-30-20-□□	100	308	208	1.7
AUGE 88-30-25-□□	100	308	258	2.0
AUGE 88-30-30-□□	100	308	308	2.2

Product no.	H	W	D	Weight (kg)
AUGE 88-30-36-□□	100	308	368	2.5
AUGE 88-30-43-□□	100	308	438	2.9
AUGE 88-30-50-□□	100	308	508	3.2
AUGE 88-36-20-□□	100	368	208	2.0
AUGE 88-36-25-□□	100	368	258	2.2
AUGE 88-36-30-□□	100	368	308	2.5
AUGE 88-36-36-□□	100	368	368	2.8
AUGE 88-36-43-□□	100	368	438	3.3
AUGE 88-36-50-□□	100	368	508	3.7
AUGE 88-43-20-□□	100	438	208	2.3
AUGE 88-43-25-□□	100	438	258	2.6
AUGE 88-43-30-□□	100	438	308	2.9
AUGE 88-43-36-□□	100	438	368	3.3
AUGE 88-43-43-□□	100	438	438	3.7
AUGE 88-43-50-□□	100	438	508	4.2
AUGE 88-50-30-□□	100	508	308	3.2
AUGE 88-50-36-□□	100	508	368	3.7
AUGE 88-50-43-□□	100	508	438	4.2
AUGE 88-50-50-□□	100	508	508	4.7
AUGE133-16-16-□□	144.5	168	168	1.3
AUGE133-16-20-□□	144.5	168	208	1.5
AUGE133-16-25-□□	144.5	168	258	1.7
AUGE133-16-30-□□	144.5	168	308	1.9
AUGE133-20-16-□□	144.5	208	168	1.4
AUGE133-20-20-□□	144.5	208	208	1.6
AUGE133-20-25-□□	144.5	208	258	1.9
AUGE133-20-30-□□	144.5	208	308	2.1
AUGE133-20-36-□□	144.5	208	368	2.4
AUGE133-20-43-□□	144.5	208	438	2.8
AUGE133-25-16-□□	144.5	258	168	1.6
AUGE133-25-20-□□	144.5	258	208	1.9
AUGE133-25-25-□□	144.5	258	258	2.1
AUGE133-25-30-□□	144.5	258	308	2.4
AUGE133-25-36-□□	144.5	258	368	2.7
AUGE133-25-43-□□	144.5	258	438	3.1
AUGE133-30-16-□□	144.5	308	168	1.8
AUGE133-30-20-□□	144.5	308	208	2.1
AUGE133-30-25-□□	144.5	308	258	2.4
AUGE133-30-30-□□	144.5	308	308	2.7
AUGE133-30-36-□□	144.5	308	368	3.0
AUGE133-30-43-□□	144.5	308	438	3.4
AUGE133-30-50-□□	144.5	308	508	3.8
AUGE133-36-20-□□	144.5	368	208	2.3
AUGE133-36-25-□□	144.5	368	258	2.7
AUGE133-36-30-□□	144.5	368	308	3.0
AUGE133-36-36-□□	144.5	368	368	3.4
AUGE133-36-43-□□	144.5	368	438	3.9
AUGE133-36-50-□□	144.5	368	508	4.3
AUGE133-43-20-□□	144.5	438	208	2.7
AUGE133-43-25-□□	144.5	438	258	3.0
AUGE133-43-30-□□	144.5	438	308	3.4
AUGE133-43-36-□□	144.5	438	368	3.8
AUGE133-43-43-□□	144.5	438	438	4.3
AUGE133-43-50-□□	144.5	438	508	4.9
AUGE133-50-30-□□	144.5	508	308	3.8
AUGE133-50-36-□□	144.5	508	368	4.3
AUGE133-50-43-□□	144.5	508	438	4.8
AUGE133-50-50-□□	144.5	508	508	5.4

AUGH series PORTABLE ALUMINIUM INSTRUMENT CASE with HANDLE

NEW

- Rugged design aluminium enclosure with carrying handle that can withstand a maximum load of up to 20.0 kg.
- TPE (Elastomer) corner guards are elastic and also act as non-slip rubber feet.
- A large selection of 108 different sizes to choose from.
- A total of 12 selectable color combinations with 4 corner guard colors - Black, Gray, Navy and Red -, 2 handle colors - Black and Gray-, and 2 enclosure colors - Silver and Black anodized-.
- Versatile aluminium case suitable for use as measuring instrument, controller, industrial embedded computer, power supply, audio amplifier, and so on.

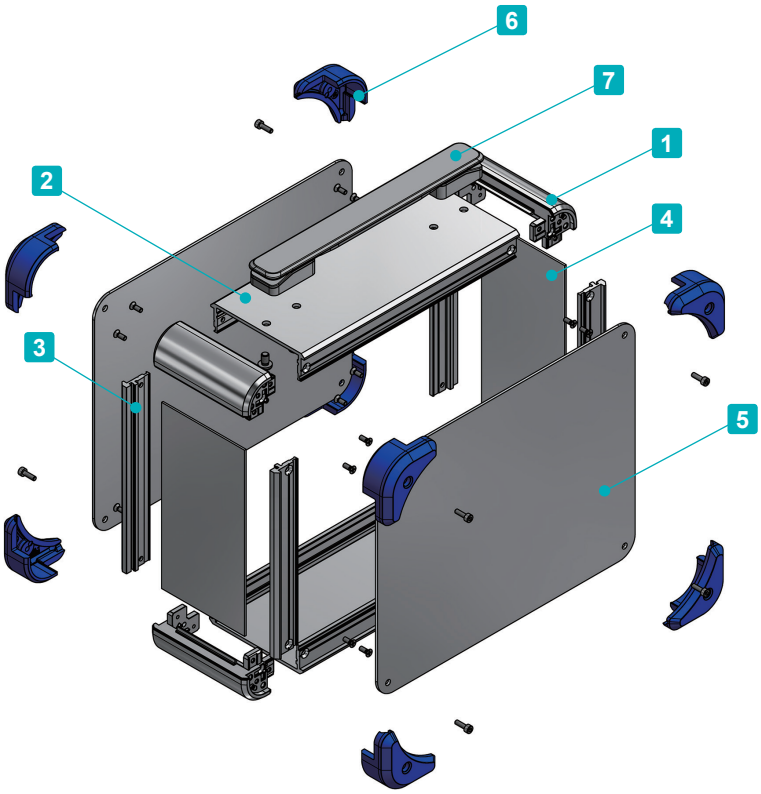

Included screws
- Top / Bottom cover (not applicable to some models)
  M3-5 original trapezoid head (hex) &
  Nickel plated / Black trivalent chromate x 4~8 pcs
- Frame / Panel support frame
  M3-8 flat head & Nickel plated x 16 pcs
- Corner guard
  M3-10 hex & Black trivalent chromate x 8 pcs

* Hex wrench included.

- Carrying handle
  M5-8 pan head self-tapping screw & Black trivalent chromate x 4 pcs

Recommended torque :
- M3 -10 hex - 0.2N • m
- M5-8 pan head self-tapping screw 1.5N • m
- Other screws - 0.3 ~ 0.6N • m

* Recommended torque listed is for reference only; actual may differ. Assemble after testing torque.

Components

No.	Part name	Pcs	Material	Color / Finish
1	Corner block	4	Diecast aluminium ADC12	Silver • Black / Painted (Unfinished inside)
2	Frame	2	Extruded aluminium A6063S-T5	Silver • Black / Anodized
3	Panel support frame	4	Extruded aluminium A6063S-T5	Silver • Black / Anodized
4	Panel	2	Aluminium A1100P	Silver • Black / Anodized
5	Top • bottom cover	2	Aluminium A1100P	Silver • Black / Anodized
6	Corner guard	8	TPE (Elastomer)	Black • Gray • Navy • Red
7	Carrying handle	1	PU • PA6 • ABS • SWCH • Steel	Black • Gray

AUGH dimensions

■ DXF/DWG/PDF/STP drawings available on our website.

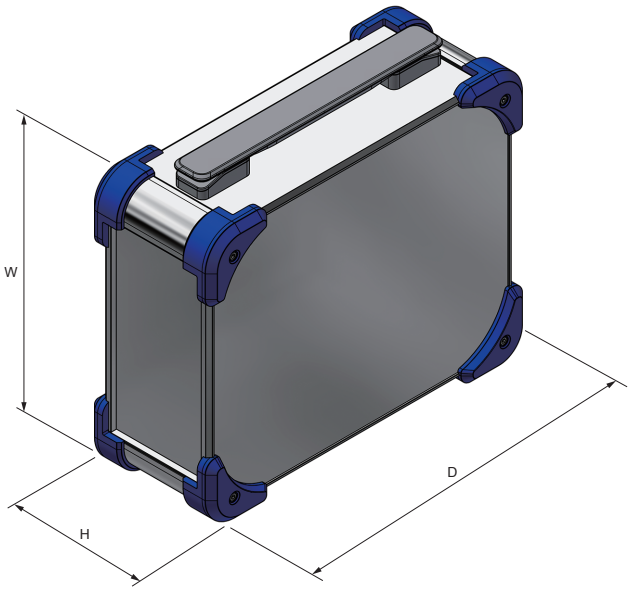

■ Mounting of a PCB or optional mounting plate is made easy through the use of the through-holes inside the aluminium diecast corner block.
See page 180 for how to install mounting plate.

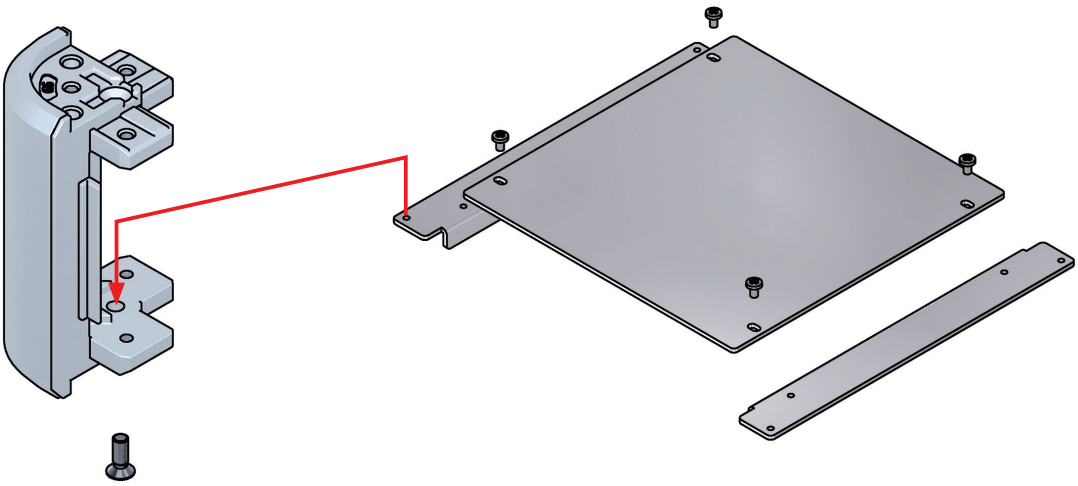

Accessories (Optional parts)

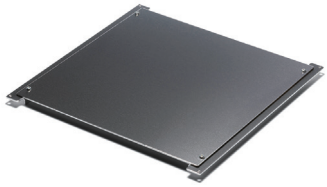

Mounting plate AUC series
See page 179 ~ 180

Color Type

Please choose from the color combinations listed below.

S B B
(Silver / Black / Black)

S G B
(Silver / Gray / Black)

S N B
(Silver / Navy / Black)

S R B
(Silver / Red / Black)

S B G
(Silver / Black / Gray)

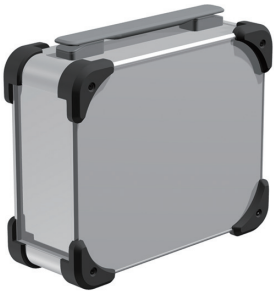

S G G
(Silver / Gray / Gray)

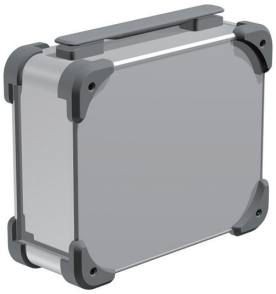

S N G
(Silver / Navy / Gray)

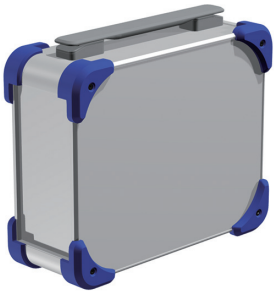

S R G
(Silver / Red / Gray)

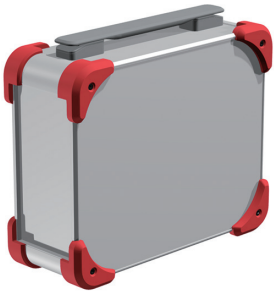

B B B
(Black / Black / Black)

B G B
(Black / Gray / Black)

B N B
(Black / Navy / Black)

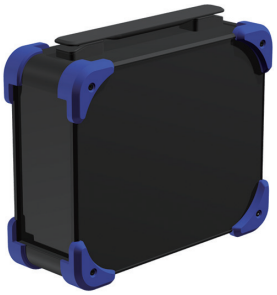

B R B
(Black / Red / Black)

Product Number To determine a product number, please suffix Color code at the end of product number.

AUGH □ - □ - □ - □ □ □

H-W-D dimensions

See page 174 for dimensions / product no.

Color

SBB / SGB / SNB / SRB
SBG / SGG / SNG / SRG
BBB / BGB / BNB / BRB

Numbering example :
If looking at "H100 x W258 x D368mm, Color type SRG"

➡ **AUGH 88-25-36-SRG**

Product no. / Details

■ Please suffix color code at the end of the product number.

Product no.	H	W	D	Weight (kg)
AUGH 44-16-25-□□□	56	168	258	1.0
AUGH 44-16-30-□□□	56	168	308	1.2
AUGH 44-16-36-□□□	56	168	368	1.3
AUGH 44-20-25-□□□	56	208	258	1.2
AUGH 44-20-30-□□□	56	208	308	1.3
AUGH 44-20-36-□□□	56	208	368	1.5
AUGH 44-25-25-□□□	56	258	258	1.3
AUGH 44-25-30-□□□	56	258	308	1.5
AUGH 44-25-36-□□□	56	258	368	1.7
AUGH 44-30-25-□□□	56	308	258	1.5
AUGH 44-30-30-□□□	56	308	308	1.7
AUGH 44-30-36-□□□	56	308	368	2.0
AUGH 44-36-25-□□□	56	368	258	1.7
AUGH 44-36-30-□□□	56	368	308	2.0
AUGH 44-36-36-□□□	56	368	368	2.4
AUGH 66-16-25-□□□	78	168	258	1.2
AUGH 66-16-30-□□□	78	168	308	1.3
AUGH 66-16-36-□□□	78	168	368	1.5
AUGH 66-16-43-□□□	78	168	438	1.9
AUGH 66-20-25-□□□	78	208	258	1.3
AUGH 66-20-30-□□□	78	208	308	1.5
AUGH 66-20-36-□□□	78	208	368	1.7
AUGH 66-20-43-□□□	78	208	438	2.0
AUGH 66-25-25-□□□	78	258	258	1.5
AUGH 66-25-30-□□□	78	258	308	1.7
AUGH 66-25-36-□□□	78	258	368	2.0
AUGH 66-25-43-□□□	78	258	438	2.3
AUGH 66-30-25-□□□	78	308	258	1.7
AUGH 66-30-30-□□□	78	308	308	2.0
AUGH 66-30-36-□□□	78	308	368	2.2
AUGH 66-30-43-□□□	78	308	438	2.6
AUGH 66-30-50-□□□	78	308	508	2.9
AUGH 66-36-25-□□□	78	368	258	2.0
AUGH 66-36-30-□□□	78	368	308	2.2
AUGH 66-36-36-□□□	78	368	368	2.5
AUGH 66-36-43-□□□	78	368	438	2.9
AUGH 66-36-50-□□□	78	368	508	3.3
AUGH 66-43-25-□□□	78	438	258	2.3
AUGH 66-43-30-□□□	78	438	308	2.6
AUGH 66-43-36-□□□	78	438	368	2.9
AUGH 66-43-43-□□□	78	438	438	3.3
AUGH 66-43-50-□□□	78	438	508	3.8
AUGH 66-50-30-□□□	78	508	308	2.9
AUGH 66-50-36-□□□	78	508	368	3.3
AUGH 66-50-43-□□□	78	508	438	3.8
AUGH 66-50-50-□□□	78	508	508	4.2
AUGH 88-16-25-□□□	100	168	258	1.3
AUGH 88-16-30-□□□	100	168	308	1.5
AUGH 88-16-36-□□□	100	168	368	1.7
AUGH 88-16-43-□□□	100	168	438	2.0
AUGH 88-20-25-□□□	100	208	258	1.5
AUGH 88-20-30-□□□	100	208	308	1.7
AUGH 88-20-36-□□□	100	208	368	1.9
AUGH 88-20-43-□□□	100	208	438	2.2

Product no.	H	W	D	Weight (kg)
AUGH 88-25-25-□□□	100	258	258	1.7
AUGH 88-25-30-□□□	100	258	308	1.7
AUGH 88-25-36-□□□	100	258	368	2.2
AUGH 88-25-43-□□□	100	258	438	2.5
AUGH 88-30-25-□□□	100	308	258	1.9
AUGH 88-30-30-□□□	100	308	308	2.1
AUGH 88-30-36-□□□	100	308	368	2.4
AUGH 88-30-43-□□□	100	308	438	2.8
AUGH 88-30-50-□□□	100	308	508	3.1
AUGH 88-36-25-□□□	100	368	258	2.1
AUGH 88-36-30-□□□	100	368	308	2.4
AUGH 88-36-36-□□□	100	368	368	2.7
AUGH 88-36-43-□□□	100	368	438	3.2
AUGH 88-36-50-□□□	100	368	508	3.5
AUGH 88-43-25-□□□	100	438	258	2.4
AUGH 88-43-30-□□□	100	438	308	2.8
AUGH 88-43-36-□□□	100	438	368	3.1
AUGH 88-43-43-□□□	100	438	438	3.6
AUGH 88-43-50-□□□	100	438	508	4.0
AUGH 88-50-30-□□□	100	508	308	3.1
AUGH 88-50-36-□□□	100	508	368	3.5
AUGH 88-50-43-□□□	100	508	438	4.0
AUGH 88-50-50-□□□	100	508	508	4.5
AUGH133-16-25-□□□	144.5	168	258	1.6
AUGH133-16-30-□□□	144.5	168	308	1.8
AUGH133-16-36-□□□	144.5	168	368	2.1
AUGH133-16-43-□□□	144.5	168	438	2.5
AUGH133-20-25-□□□	144.5	208	258	1.8
AUGH133-20-30-□□□	144.5	208	308	2.0
AUGH133-20-36-□□□	144.5	208	368	2.3
AUGH133-20-43-□□□	144.5	208	438	2.7
AUGH133-25-25-□□□	144.5	258	258	2.0
AUGH133-25-30-□□□	144.5	258	308	2.3
AUGH133-25-36-□□□	144.5	258	368	2.6
AUGH133-25-43-□□□	144.5	258	438	3.0
AUGH133-30-25-□□□	144.5	308	258	2.2
AUGH133-30-30-□□□	144.5	308	308	2.5
AUGH133-30-36-□□□	144.5	308	368	2.9
AUGH133-30-43-□□□	144.5	308	438	3.3
AUGH133-30-50-□□□	144.5	308	508	3.7
AUGH133-36-25-□□□	144.5	368	258	2.5
AUGH133-36-30-□□□	144.5	368	308	2.8
AUGH133-36-36-□□□	144.5	368	368	3.2
AUGH133-36-43-□□□	144.5	368	438	3.7
AUGH133-36-50-□□□	144.5	368	508	4.2
AUGH133-43-25-□□□	144.5	438	258	2.9
AUGH133-43-30-□□□	144.5	438	308	3.2
AUGH133-43-36-□□□	144.5	438	368	3.6
AUGH133-43-43-□□□	144.5	438	438	4.2
AUGH133-43-50-□□□	144.5	438	508	4.7
AUGH133-50-30-□□□	144.5	508	308	3.6
AUGH133-50-36-□□□	144.5	508	368	4.0
AUGH133-50-43-□□□	144.5	508	438	4.6
AUGH133-50-50-□□□	144.5	508	508	5.2

AUC series MOUNTING PLATE for AU□ series

NEW

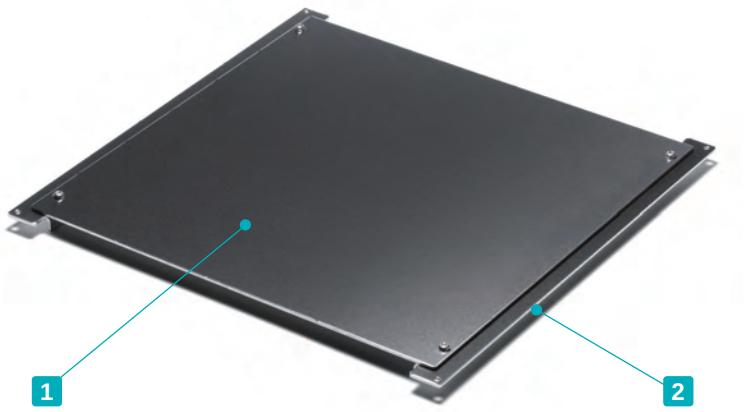

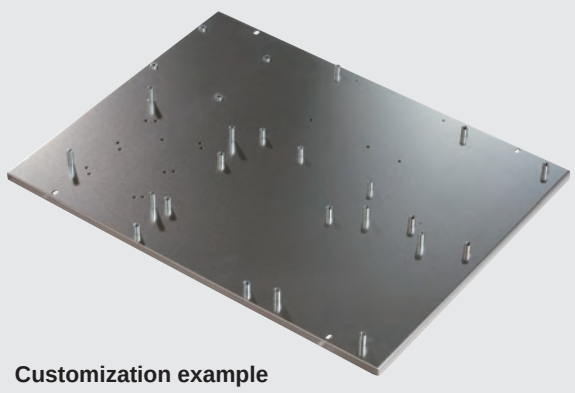

Customization example

■ See page CUSTOM-9 ~ CUSTOM-11 and our website for further details.

■ Mounting plate for AU, AUP, AUPE, AUX, AUXE, AUG and AUGE series.

Components

No.	Part name	Pcs	Material	Finish
1	Mounting plate	1	Aluminium A1050P t=2.0	Unfinished
2	L-bracket	2	Aluminium A1050P t=2.0	Unfinished

Included screw :
- Corner block M3 flat head : Nickel plated x 4
- Mounting plate M3-5 pan head : Trivalent chromate x 4

■ DXF/DWG/PDF drawings available on our website.

AUC dimensions

Non-reinforced (N) type

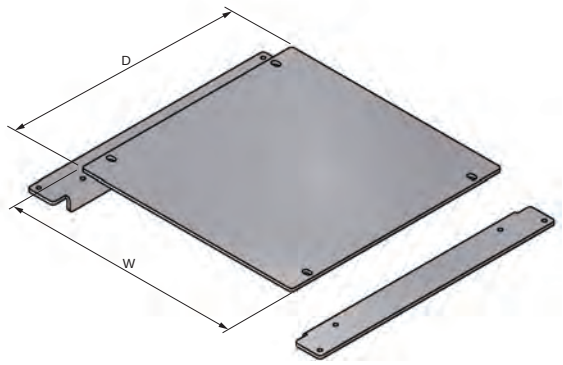

Reinforced (Y) type

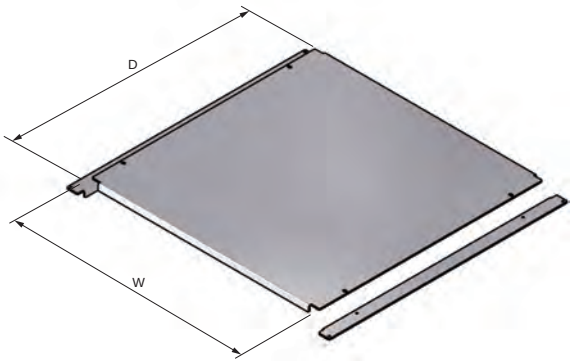

Product no. / Dimensions

Product no.	W	D	Enclosure W x D	Reinforcement	Weight (g)
AUC16-16	108	108	160×160	N	102
AUC16-20	108	148	160×200	N	138
AUC16-25	108	198	160×250	N	181
AUC16-30	108	248	160×300	N	226
AUC20-16	148	108	200×160	N	126
AUC20-20	148	148	200×200	N	170
AUC20-25	148	198	200×250	N	224
AUC20-30	148	248	200×300	N	279
AUC20-36	148	308	200×360	N	345
AUC20-43	148	378	200×430	N	422
AUC25-16	198	108	250×160	N	155
AUC25-20	198	148	250×200	N	210
AUC25-25	198	198	250×250	N	278
AUC25-30	198	248	250×300	N	346
AUC25-36	198	308	250×360	N	428
AUC25-43	198	378	250×430	N	524
AUC30-16	248	108	300×160	N	184
AUC30-20	248	148	300×200	N	249
AUC30-25	248	198	300×250	N	331
AUC30-30	248	248	300×300	N	413
AUC30-36	248	308	300×360	N	512

Product no.	W	D	Enclosure W x D	Reinforcement	Weight (g)
AUC30-43	248	378	300×430	N	626
AUC30-50	248	448	300×500	N	741
AUC36-20	308	148	360×200	N	297
AUC36-25	308	198	360×250	N	395
AUC36-30	308	248	360×300	N	494
AUC36-36	308	308	360×360	N	581
AUC36-43	308	378	360×430	N	749
AUC36-50	308	448	360×500	N	886
AUC43-20	378	148	430×200	Y	353
AUC43-25	378	198	430×250	Y	470
AUC43-30	378	248	430×300	Y	587
AUC43-36	378	308	430×360	Y	728
AUC43-43	378	378	430×430	Y	918
AUC43-50	378	448	430×500	Y	1,082
AUC50-30	448	248	500×300	Y	681
AUC50-36	448	308	500×360	Y	814
AUC50-43	448	378	500×430	Y	1,061
AUC50-50	448	448	500×500	Y	1,257
AUC60-36	548	308	600×360	Y	1,021
AUC60-43	548	378	600×430	Y	1,279

How to install AUC mounting plate

1. Install L-bracket onto countersunk screw hole on corner block.

2. Install mounting plate onto L-bracket with screws.

AUCG series CORNER GUARD for AU□ series

NEW

AUCG dimensions

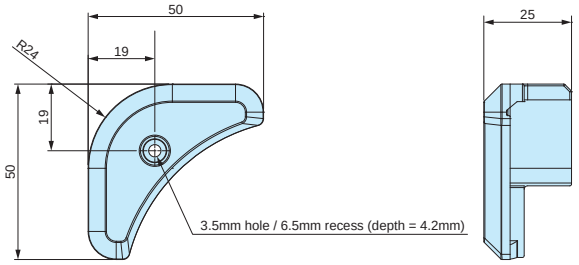

■ DXF/DWG/PDF drawings available on our website.

■ Spare corner guard for AUG and AUGE series. AUCG corner guard can also be installed on AU, AUP, AUPE, AUX, and AUXE series enclosures.

■ 4 colors available: Black, Gray, Navy, and Red. Retailed as a pack of 8pcs.

Product no.

Product no.				Weight (g)	Pack of
● Black	● Gray	● Navy	● Red		
AUCG-1B	AUCG-1G	AUCG-1N	AUCG-1R	9.5	8

AEG series EMC SHIELDING GASKET for AU□ series

NEW

EMC Shielding Effects

■ Spare EMC shielding gasket for AUPE, AUXE, and AUGE series enclosures. Installation on AUP series is possible to allow it to be EMC shielded.

Cross section view

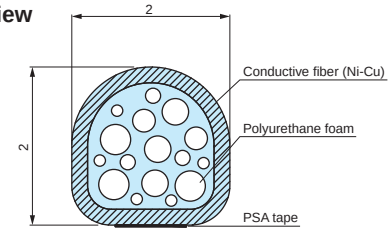

Product no.

Product no.	Material	Color	Sales unit
AEG-1000	Conductive fiber UL94V-0	Metallic gray	1000mm x 1 pc

MAR series WALL MOUNT SUPPORT ARM

NEW

- Wall mount support arm move easily to the preferred positions.
- Suitable for command panel on machinery and touch panel controller. Easy installation onto the wall as well.
- Hole pitch on the monitor bracket is compatible with VESA mount standards. Possible to mount PC display without modification.

MAR specifications

MAR-312W

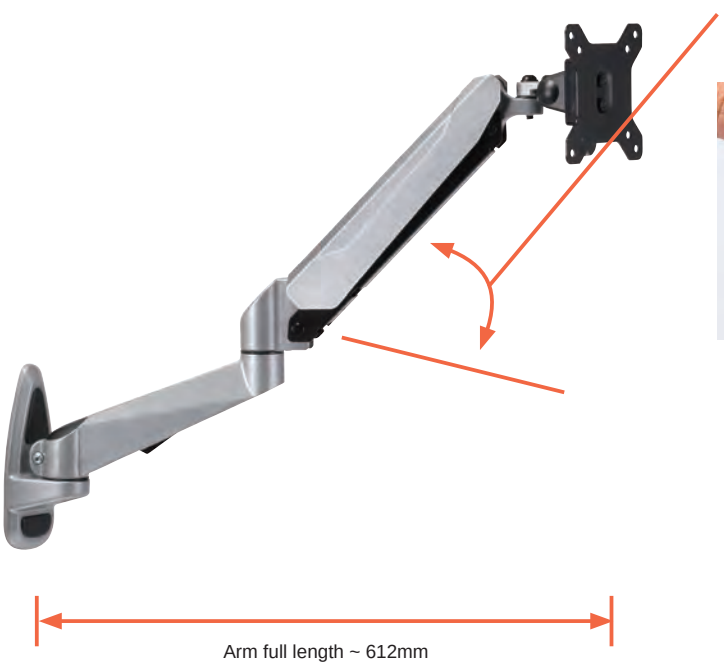

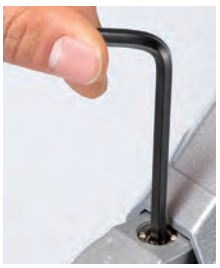

Adjustable bolt for up/down direction on arm is firmly set initially.
Adjust the movement according to the installed device.

Pan-Tilt bracket dimensions

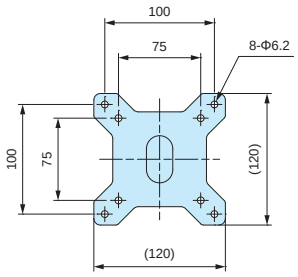

Wall mounting bracket dimensions

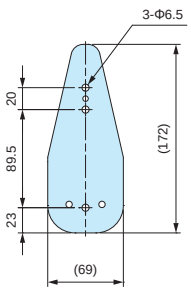

Max load : 6.5kg (including product weight, adjustable bolt firmly locked)
Material : Steel • Plastic • Aluminium diecast
*Wall mounting screws included.

MAR-111W

Pan-Tilt bracket angle can be adjusted by loosening the bolt after replacing the cover.

Pan-Tilt bracket dimensions

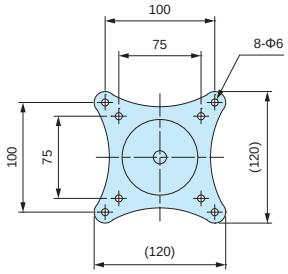

Wall mounting bracket dimensions

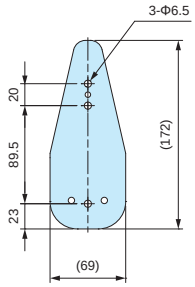

Max load : 8kg (including product weight)
Material : Steel • Plastic • Aluminium diecast
*Wall mounting screws included.

MAR-110W

*Pan-Tilt bracket do not move up/down direction.

Pan-Tilt bracket dimensions

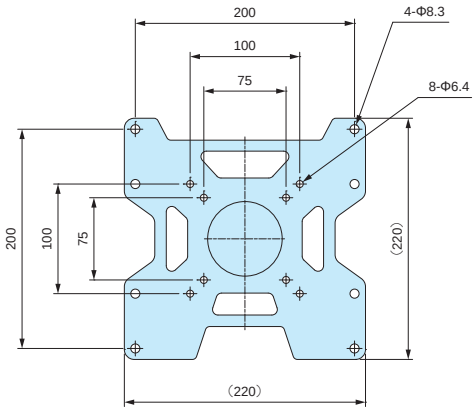

Wall mounting bracket dimensions

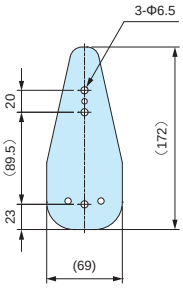

Max load : 8kg (including product weight)
Material : Steel • Plastic • Aluminium diecast
*Wall mounting screws included.

Product no. / Dimensions

Product no.	Arm full length	Arm color	Weight (kg)
MAR-312W	~ 612mm	Metallic gray	2.2
MAR-111W	~ 340mm	White / Black	1.0
MAR-110W	~ 130mm	White / Black	1.0

MXF • MXB • MXA • MX series

ALUMINIUM MOBILE ENCLOSURE

MXF • MXB • MXA • MX mobile enclosures are designed with a beautiful and elegant finish in mind. Having a rounded design, it fits comfortably in your hand, while giving off a simple yet stylish look. Suitable for use in a wide variety of industries, such as a small audio device, or as an amplifier unit, among others.
Selectable from 4 different types: an economical plastic end panel MX series, a luxurious aluminium end panel MXA series, a flanged end panel MXF series, and a protective silicone band MXB series.

APPLICATION EXAMPLE

Fiber Optic LAN Converter

Product by ENZO j-Fi (Japan)

Desktop Audio Preamplifier with USB

Product by conisis lab (Japan)

Wireless Microphone System

Product by Catchbox (Finland)

reddot award
product design

Ethernet Cellular Router

Product by NimbeLink (USA)

WiFi Access Point

AIS (Automatic Identification System) Signal Receiver

Product by SRT Marine System Solutions (UK)

Data Transmitter for Automatic Number Plate Recognition (ANPR) System

Product by Sensor Dynamics (Australia)

IO-Link DEVICE

Product by Lemonage Software (Germany)

CAN & LIN Vehicle Communication Simulator / Monitor

Product by P&A Technologies (Japan)

Signal Checker / Tester

Product by KUWATEC (Japan)

Audio Power Supply

Product by ACOUSTIC REVIVE (Japan)

Model Railroad Controller

Product by Calura (Japan)

Portable Frequency Standard Device

Product by FREQTIME (Japan)

Spectral Luminometer

Product by Spectra Co-op (Japan)

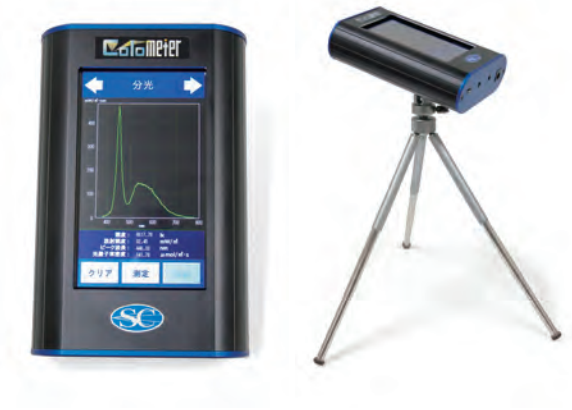

RTD Sensor Tester

Product by Turbomation (USA)

Mobile Moisture Meter

Product by ARP (Japan)

Full Color LED Tabletop Lighting Device

Product by DAISHO DENKI (Japan)

Active EMF Protection Device

Product by Blueshield (New Zealand)

Illumination Inverter

Product by Future Illuminations (USA)

MXF series FLANGED NETWORK ALUMINIUM ENCLOSURE

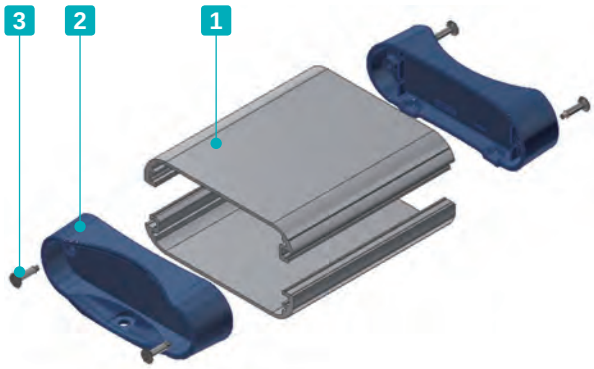

- Flanged network enclosure with easy to hold rounded design.
- 8 different color combinations and 12 different sizes available to choose from.
- Suitable to be used as transmitters, measurement tools, controllers, etc.
- Grooves are built into the internal enclosure, allowing for easy sliding/insertion of PCB boards.

Included screws
MXF2-6 models : M2.6-14 x 4 pcs
MXF2-8, 3-11 models : M3-12 x 4 pcs
MXF4-13 models : M3-14 x 4 pcs

Components

No.	Part name	Pcs	Material	Color / Finish
1	Frame	2	Extruded aluminium A6063S-T5	Silver • Black / Anodized with clear coating
2	Flanged panel	2	ABS UL94HB	Black • Gray / Unpainted Navy • Lime / Painted
3	Self-tapping screw	4	Steel	Nickel plated • Black trivalent chromate

Custom length available in 1mm intervals.

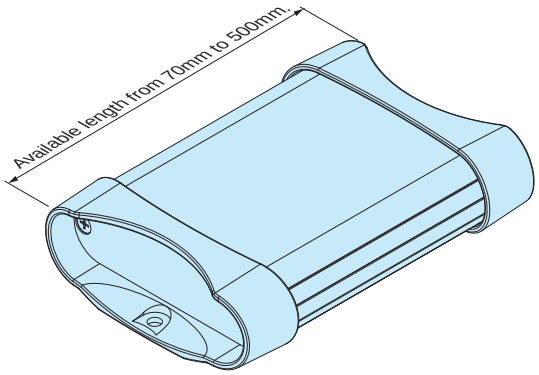

Color Type Please choose from the color combinations listed below

※Black and Gray panels are ABS color. Navy and Lime panels are Painted.

BB Black / Black	BG Black / Gray	BN Black / Navy	BL Black / Lime
SB Silver / Black	**SG Silver / Gray**	**SN Silver / Navy**	**SL Silver / Lime**

MXF dimensions

■ DXF/DWG/PDF/STP drawings available on our website.

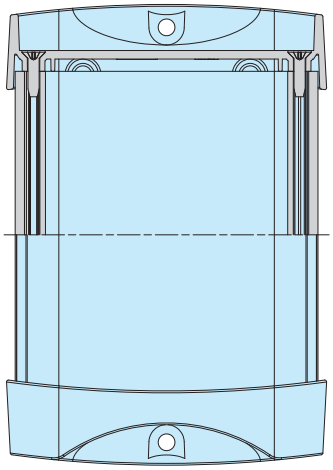

Screw Type

P	H
Plus head	Hexalobular head

Please request / order by indicating the combination part number as below.

MXF 2 – 6 – 7 □ □ □

Color code

Screw P or H

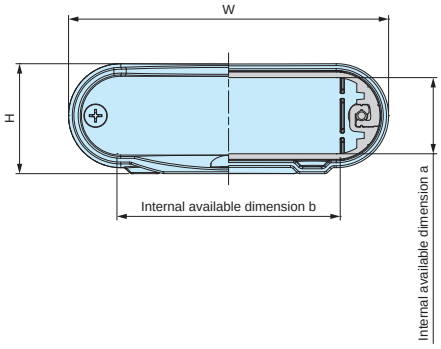

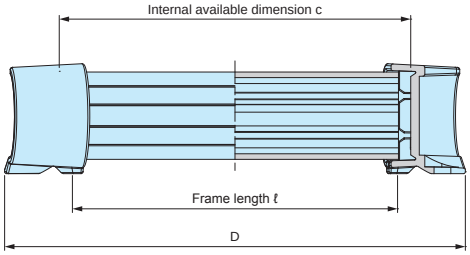

Product no. / Dimensions

■ Please suffix color and screw code at the end of the product number.

Product no.	H	W	D	a	b	c	ℓ	Weight (g)
MXF2- 6- 7□□□	23.4	60.9	65	15.1	41.1	45	40	44
MXF2- 6- 9□□□	23.4	60.9	90	15.1	41.1	70	65	59
MXF2- 6-12□□□	23.4	60.9	115	15.1	41.1	95	90	75
MXF2- 8- 9□□□	29.6	86.1	94	20.5	60.1	64.6	58	90
MXF2- 8-12□□□	29.6	86.1	124	20.5	60.1	94.6	88	121
MXF2- 8-15□□□	29.6	86.1	154	20.5	60.1	124.6	118	153
MXF3-11-10□□□	35.6	114.2	104	26.5	87.3	74.6	66	130
MXF3-11-14□□□	35.6	114.2	144	26.5	87.3	114.6	106	184
MXF3-11-19□□□	35.6	114.2	194	26.5	87.3	164.6	156	251
MXF4-13-12□□□	40.6	134.2	124	31	104.1	94.4	84	197
MXF4-13-17□□□	40.6	134.2	174	31	104.1	144.4	134	284
MXF4-13-23□□□	40.6	134.2	234	31	104.1	204.4	194	388

MXB series ALUMINIUM MOBILE ENCLOSURE with SILICONE BAND

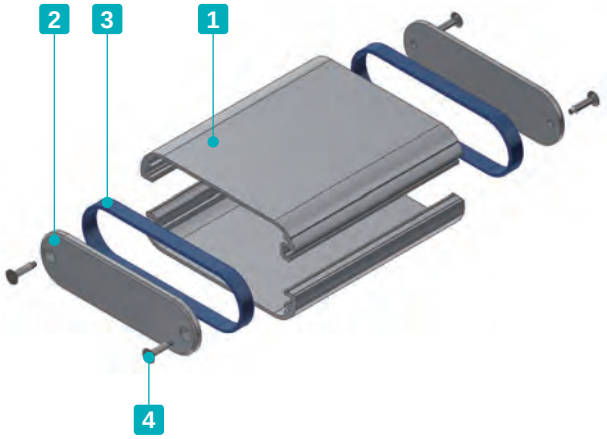

- All aluminium mobile enclosure with anti-slip, impact resistant silicone band.
- 16 different color combinations and 24 different sizes available to choose from.
- Suitable to be used as digital audio amplifiers, communication devices, measurement tools, etc.

Included screws
MXB2-4, 2-6 models : M2.6-14 x 4 pcs
MXB2-7, 2-8, 3-11, 4-7, 4-10, 4-13 models : M3-10 x 4 pcs

Components

No.	Part name	Pcs	Material	Color / Finish
1	Frame	2	Extruded aluminium A6063S-T5	Silver • Black / Anodized with clear coating
2	Panel	2	Aluminium A1050P	Silver • Black / Anodized
3	Silicone band	2	Silicone	Black • Light gray • Navy • Cyan • Green • Yellow • Orange • Red
4	Self-tapping screw	4	Steel	Nickel plated • Black trivalent chromate

Color Type

BB Black / Black	BL Black / Light gray	BN Black / Navy	BC Black / Cyan	BG Black / Green	BY Black / Yellow	BO Black / Orange	BR Black / Red

SB Silver / Black	SL Silver / Light gray	SN Silver / Navy	SC Silver / Cyan	SG Silver / Green	SY Silver / Yellow	SO Silver / Orange	SR Silver / Red

- Mix and match the MXA series with the SIB series silicone band for a wider variety of color combinations.

MXB dimensions

■ DXF/DWG/PDF/STP drawings available on our website.

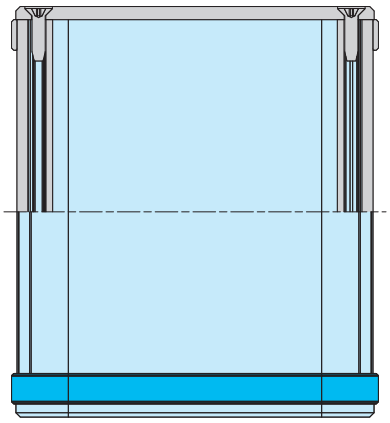

Screw Type

P	H
Plus head	Hexalobular head

Please request / order by indicating the combination part number as below.

MXB 2 – 4 – 4 □ □ □

Color code

Screw P or H

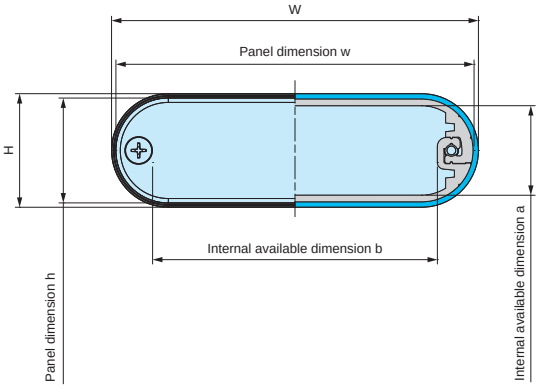

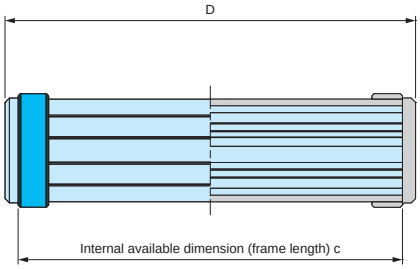

Product no. / Dimensions

■ Please suffix color and screw code at the end of the product number.

Product no.	H	W	D	h	w	a	b	c	Weight (g)
MXB2- 4- 4□□□	18	43.6	44	15	41	12.2	26.6	38	26
MXB2- 4- 7□□□	18	43.6	74	15	41	12.2	26.6	68	41
MXB2- 4-10□□□	18	43.6	104	15	41	12.2	26.6	98	51
MXB2- 6- 5□□□	20.3	59.6	46	18	57	15.1	42.5	40	36
MXB2- 6- 7□□□	20.3	59.6	71	18	57	15.1	42.5	65	51
MXB2- 6-10□□□	20.3	59.6	96	18	57	15.1	42.5	90	66
MXB2- 7- 5□□□	23.5	72.5	54	20	70	16.5	53.2	48	57
MXB2- 7- 8□□□	23.5	72.5	84	20	70	16.5	53.2	78	82
MXB2- 7-11□□□	23.5	72.5	114	20	70	16.5	53.2	108	112
MXB2- 8- 6□□□	26.5	84.8	64	24	82	20.5	65.2	58	77
MXB2- 8- 9□□□	26.5	84.8	94	24	82	20.5	65.2	88	107
MXB2- 8-12□□□	26.5	84.8	124	24	82	20.5	65.2	118	137
MXB3-11- 7□□□	33.5	113.9	72	30	110	26.5	93.2	66	120
MXB3-11-11□□□	33.5	113.9	112	30	110	26.5	93.2	106	170
MXB3-11-16□□□	33.5	113.9	162	30	110	26.5	93.2	156	240
MXB4- 7- 5□□□	38.2	72	52	35	70	31.4	53.2	46	72
MXB4- 7- 8□□□	38.2	72	82	35	70	31.4	53.2	76	102
MXB4- 7-11□□□	38.2	72	112	35	70	31.4	53.2	106	137
MXB4-10- 7□□□	44.7	97.9	70	40	95	36.4	78.2	64	125
MXB4-10-11□□□	44.7	97.9	110	40	95	36.4	78.2	104	180
MXB4-10-14□□□	44.7	97.9	140	40	95	36.4	78.2	134	225
MXB4-13- 9□□□	38.5	134	90	35	130	31	113.2	84	187
MXB4-13-14□□□	38.5	134	140	35	130	31	113.2	134	272
MXB4-13-20□□□	38.5	134	200	35	130	31	113.2	194	377

■ H and W may experience slight variance from listed dimensions due to silicone band construct.

MXA series ALUMINIUM MOBILE ENCLOSURE

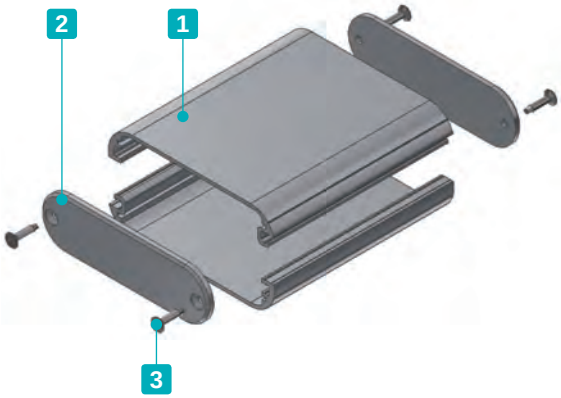

- All aluminium mobile enclosure with easy to hold rounded design.
- 14 different color combinations and 24 different sizes available to choose from.
- Suitable to be used as digital audio amplifiers, communication devices, measurement tools, etc.
- Grooves are built into the internal enclosure, allowing for easy sliding/insertion of PCB boards.

Included screws
MXA2-4, 2-6 models : M2.6-14 x 4pcs
MXA2-7, 2-8, 3-11, 4-7, 4-10, 4-13 models : M3-10 x 4 pcs

Components

No.	Part name	Pcs	Material	Color / Finish
1	Frame	2	Extruded aluminium A6063S-T5	Silver • Black / Anodized with clear coating
2	Panel	2	Aluminium A1050P	Black • Silver • Cobalt • Green • Purple • Orange • Red / Anodized
3	Self-tapping screw	4	Steel	Nickel plated • Black trivalent chromate

Custom length available in 1mm intervals.

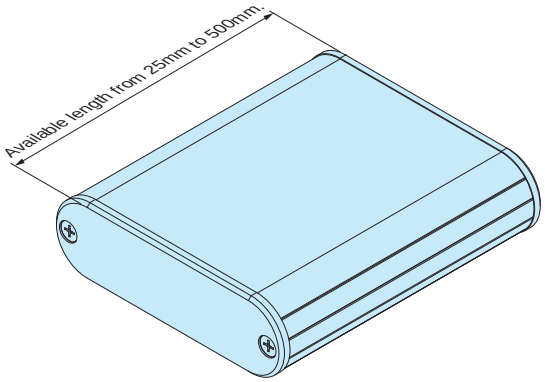

Color Type Please choose from the color combinations listed below

BB Black / Black	BS Black / Silver	BC Black / Cobalt	BG Black / Green	BP Black / Purple	BO Black / Orange	BR Black / Red

SB Silver / Black	SS Silver / Silver	SC Silver / Cobalt	SG Silver / Green	SP Silver / Purple	SO Silver / Orange	SR Silver / Red

MXA dimensions

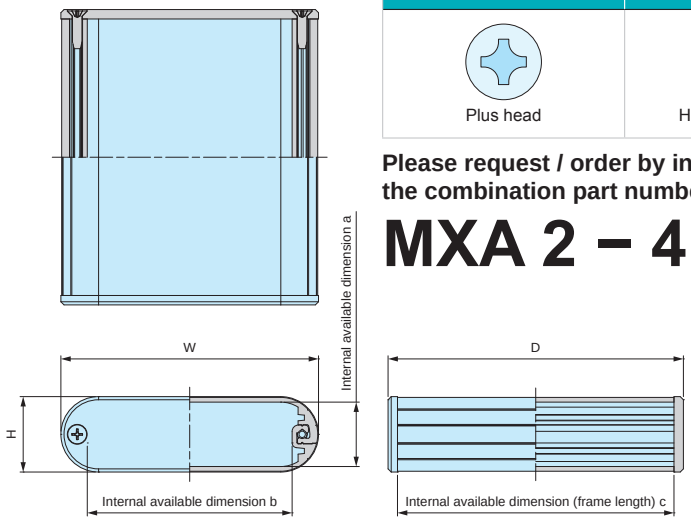

■ DXF/DWG/PDF/STP drawings available on our website.

Screw Type

P	H
Plus head	Hexalobular head

Please request / order by indicating the combination part number as below.

MXA 2 – 4 – 4 □ □ □

Color code

Screw P or H

Accessories (Optional parts)

Silicone band SIB series
See page 196

Embedded battery box BC series
See page 125 ~ 128

Product no. / Dimensions

■ Please suffix color and screw code at the end of the product number.

Product no.	H	W	D	a	b	c	Weight (g)
MXA2- 4- 4□□□	15	41	44	12.2	26.6	38	25
MXA2- 4- 7□□□	15	41	74	12.2	26.6	68	40
MXA2- 4-10□□□	15	41	104	12.2	26.6	98	50
MXA2- 6- 5□□□	18	57	46	15.1	42.5	40	35
MXA2- 6- 7□□□	18	57	71	15.1	42.5	65	50
MXA2- 6-10□□□	18	57	96	15.1	42.5	90	65
MXA2- 7- 5□□□	20	70	54	16.5	53.2	48	55
MXA2- 7- 8□□□	20	70	84	16.5	53.2	78	80
MXA2- 7-11□□□	20	70	114	16.5	53.2	108	110
MXA2- 8- 6□□□	24	82	64	20.5	65.2	58	75
MXA2- 8- 9□□□	24	82	94	20.5	65.2	88	105
MXA2- 8-12□□□	24	82	124	20.5	65.2	118	135
MXA3-11- 7□□□	30	110	72	26.5	93.2	66	115
MXA3-11-11□□□	30	110	112	26.5	93.2	106	165
MXA3-11-16□□□	30	110	162	26.5	93.2	156	235
MXA4- 7- 5□□□	35	70	52	31.4	53.2	46	70
MXA4- 7- 8□□□	35	70	82	31.4	53.2	76	100
MXA4- 7-11□□□	35	70	112	31.4	53.2	106	135
MXA4-10- 7□□□	40	95	70	36.4	78.2	64	120
MXA4-10-11□□□	40	95	110	36.4	78.2	104	175
MXA4-10-14□□□	40	95	140	36.4	78.2	134	220
MXA4-13- 9□□□	35	130	90	31	113.2	84	180
MXA4-13-14□□□	35	130	140	31	113.2	134	265
MXA4-13-20□□□	35	130	200	31	113.2	194	370

MX series MOBILE ENCLOSURE

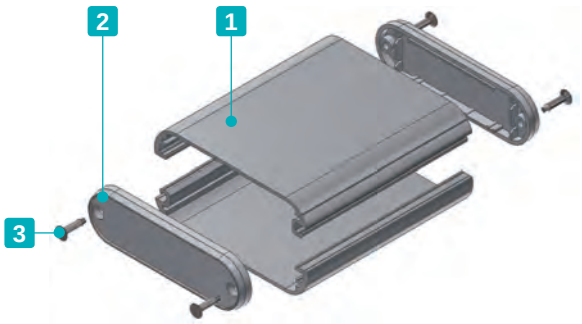

- Mobile enclosure with easy to hold rounded design.
- 12 different color combinations and 24 different sizes available to choose from.
- Frame is made from extruded aluminium material, while the panel is ABS plastic.
- Grooves are built into the internal enclosure, allowing for easy sliding/insertion of PCB boards.

Included screws
MX2-4, 2-6 models : M2.6-14 x 4 pcs
MX2-7, 2-8, 3-11 models : M3-12 x 4 pcs
MX4-7, 4-10, 4-13 models : M3-14 x 4 pcs

Components

No.	Part name	Pcs	Material	Color / Finish
1	Frame	2	Extruded aluminium A6063S-T5	Silver • Black / Anodized with clear coating
2	Panel	2	ABS UL94HB	Gray • Black / Unpainted Navy • Lime • Orange • Red / Painted
3	Self-tapping screw	4	Steel	Nickel plated • Black trivalent chromate

Custom length available in 1mm intervals.

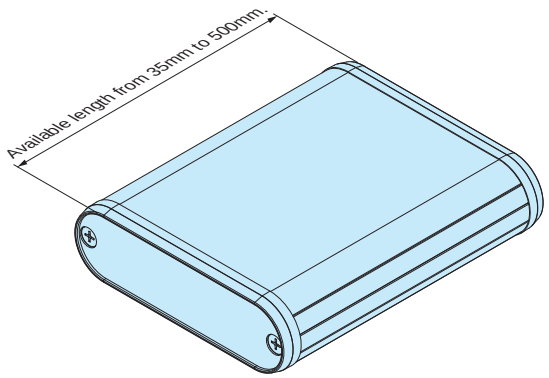

Color Type Please choose from the color combinations listed below

※Black • Gray panels / Unpainted Other panels / Painted

BB Black / Black	BG Black / Gray	BN Black / Navy	BL Black / Lime	BO Black / Orange	BR Black / Red
SB Silver / Black	**SG Silver / Gray**	**SN Silver / Navy**	**SL Silver / Lime**	**SO Silver / Orange**	**SR Silver / Red**

MX dimensions

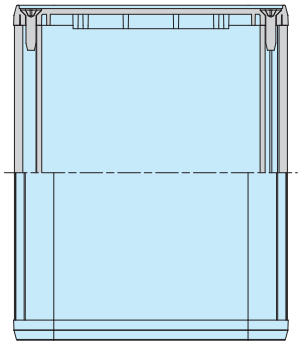

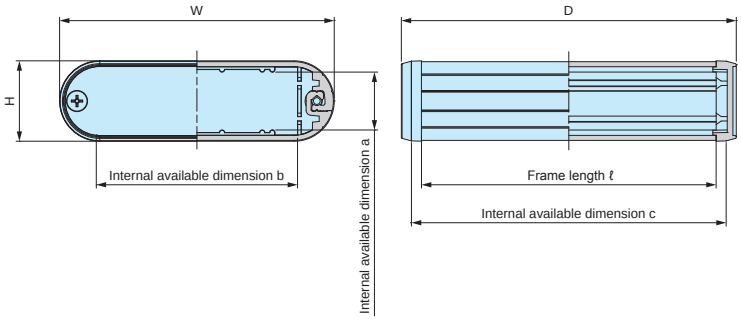

■ DXF/DWG/PDF/STP drawings available on our website.

Screw Type

P	H
Plus head	Hexalobular head

Please request / order by indicating the combination part number as below.

MX 2 – 4 – 5 □ □ □

Color code

Screw P or H

Accessories (Optional parts)

Silicone band SIB series
See page 196

Embedded battery box BC series
See page 125 ~ 128

Product no. / Dimensions

■ Please suffix color and screw code at the end of the product number.

Product no.	H	W	D	a	b	c	ℓ	Weight (g)
MX2- 4- 5□□□	15	41	50	8.9	26.6	44.6	38	20
MX2- 4- 8□□□	15	41	80	8.9	26.6	74.6	68	35
MX2- 4-11□□□	15	41	110	8.9	26.6	104.6	98	50
MX2- 6- 5□□□	18	57	50	12.3	42.5	45	40	35
MX2- 6- 8□□□	18	57	75	12.3	42.5	70	65	50
MX2- 6-10□□□	18	57	100	12.3	42.5	95	90	70
MX2- 7- 6□□□	20	70	60	13.2	53.2	54.6	48	50
MX2- 7- 9□□□	20	70	90	13.2	53.2	84.6	78	80
MX2- 7-12□□□	20	70	120	13.2	53.2	114.6	108	105
MX2- 8- 7□□□	24	82	70	17.2	65.2	64.6	58	75
MX2- 8-10□□□	24	82	100	17.2	65.2	94.6	88	105
MX2- 8-13□□□	24	82	130	17.2	65.2	124.6	118	140
MX3-11- 8□□□	30	110	80	23.3	93.2	74.6	66	110
MX3-11-12□□□	30	110	120	23.3	93.2	114.6	106	165
MX3-11-17□□□	30	110	170	23.3	93.2	164.6	156	235
MX4- 7- 6□□□	35	70	60	28.2	53.2	53	46	65
MX4- 7- 9□□□	35	70	90	28.2	53.2	83	76	100
MX4- 7-12□□□	35	70	120	28.2	53.2	113	106	130
MX4-10- 8□□□	40	95	80	33.1	78.2	73	64	115
MX4-10-12□□□	40	95	120	33.1	78.2	113	104	175
MX4-10-15□□□	40	95	150	33.1	78.2	143	134	215
MX4-13-10□□□	35	130	100	27.7	113.2	94.4	84	175
MX4-13-15□□□	35	130	150	27.7	113.2	144.4	134	265
MX4-13-21□□□	35	130	210	27.7	113.2	204.4	194	375

Cross section view of MXF • MXB • MXA • MX frames

■ DXF/DWG/PDF/STP drawings available on our website.

MXF • MXB • MXA • MX2-4-□

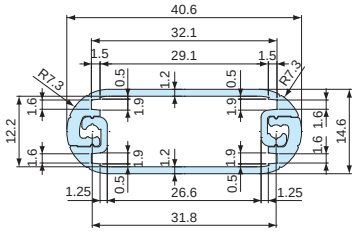

MXF • MXB • MXA • MX2-8-□

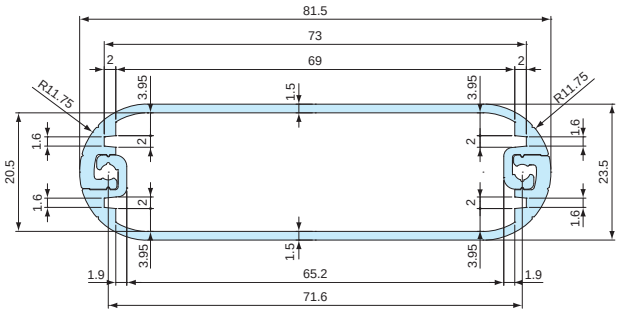

MXF • MXB • MXA • MX2-6-□

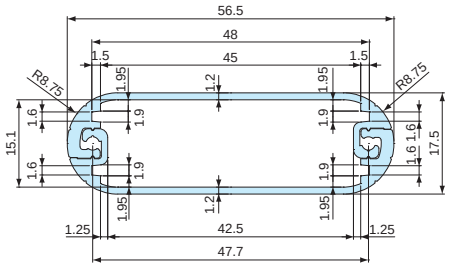

MXF • MXB • MXA • MX3-11-□

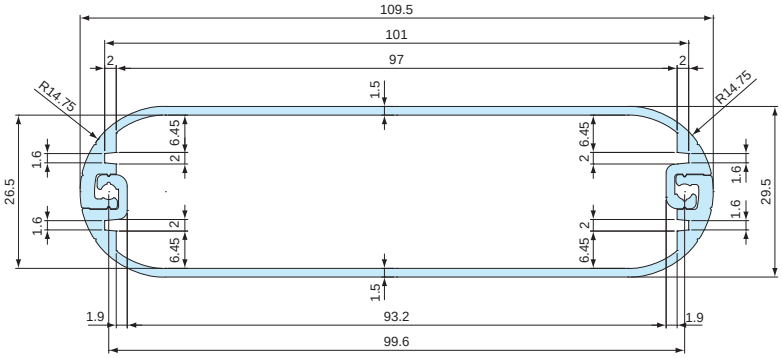

MXF • MXB • MXA • MX2-7-□

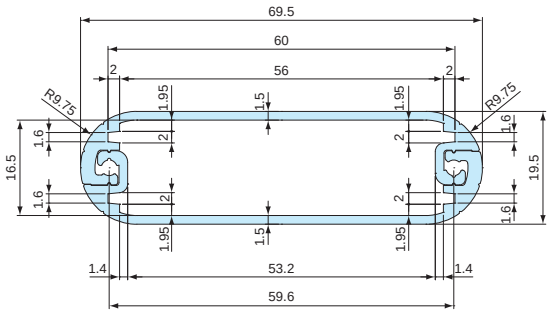

MXF • MXB • MXA • MX4-7-□

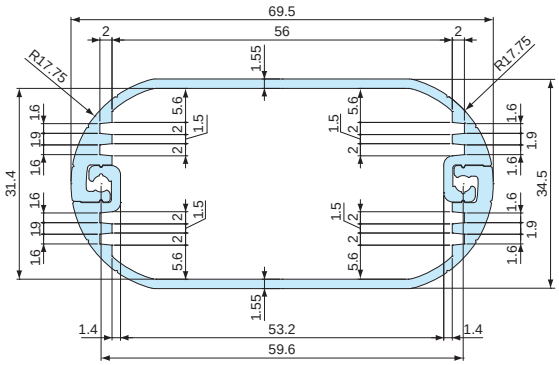

MXF • MXB • MXA • MX4-10-□

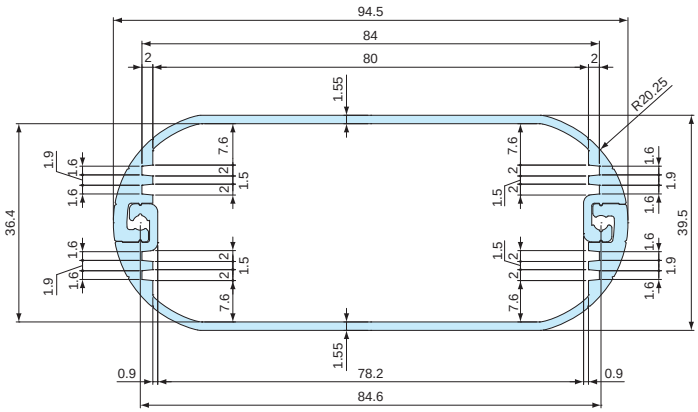

MXF • MXB • MXA • MX4-13-□

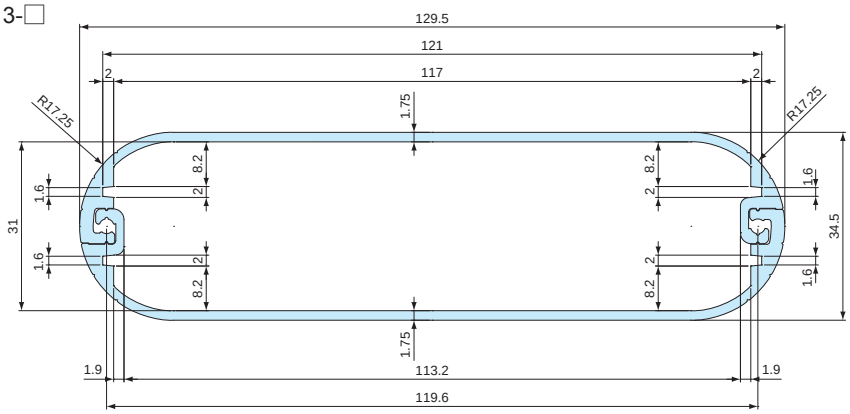

Accessories (Optional parts)

SIB series SILICONE BAND

Application example

- Silicone band designed to fit MXA and MX series.
- Silicone band provides both shock resistance and non-slip grips for the enclosure.
- Elastic silicone band may also fit other similarly sized enclosures.

SIB dimensions

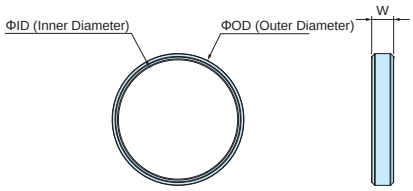

Color Type

Code	R Red	O Orange	Y Yellow	G Green	C Cyan	N Navy	L Light gray	B Black
Color								

Components

Part name	Pcs	Material	Color
Silicone band	Pair (2 pcs)	Silicone	Red • Orange • Yellow • Green • Cyan • Navy • Light gray • Black

Product no. / Dimensions

■ Please suffix color code at the end of the product number.

Product no.	W	ID	OD	Suitable models	Enclosure circumference (mm)	Weight (g)
SIB-21□	6	21	25	MXA • MX2-4-□ • 2-6-□	95~135	2
SIB-38□	7	38	42	MXA • MX2-7-□ • 2-8-□ • 4-7-□	160~190	4
SIB-58□	8	58	63	MXA • MX3-11-□ • 4-10-□	215~255	10
SIB-72□	10	72	77	MXA • MX4-13-□	280~320	14

MULTI-FUNCTION EXTRUDED ALUMINIUM CASE

EXPT • EXP • EXPE • EXW • EXPF • EXEF • EXWF series

The following series, by utilizing similar extrusion frames, are available in 7 different types, such as having IP65, or EMC shielded functions, among others.
73 different sizes are available for each version.

CORNER GUARD

EXP series Page 203 ~ 204

FLANGED

EXPF series Page 209 ~ 210

IP65 CORNER GUARD

EXW series Page 207 ~ 208

IP65 FLANGED

EXWF series Page 213 ~ 214

EMC CORNER GUARD

EXPE series Page 205 ~ 206

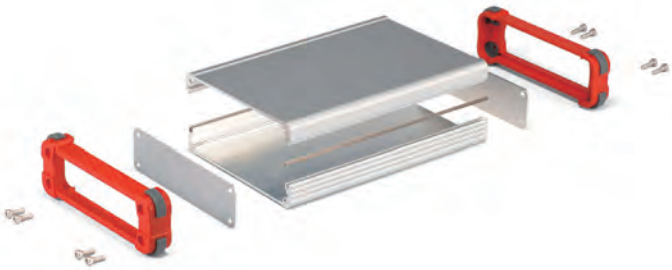

EMC FLANGED

EXEF series Page 211 ~ 212

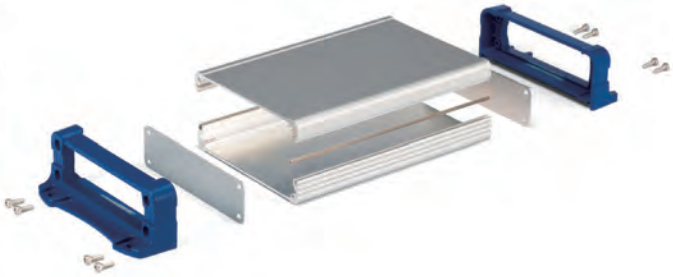

WITH TILT LEG

EXPT series Page 201 ~ 202

Custom length available in 1mm intervals

16 COLOR COMBINATIONS

EXP series is available in 2 different body frame and 8 different exterior frame colors for a total of 16 different color types.

APPLICATION EXAMPLE

Measuring Instrument

Accessories (Optional parts)
Tilt leg TLW series
See page 222

Network / Communication Box

Controller

Ultrasonic Thickness Gauge

Product by NOVOTEST (Ukraine)

Radio Communication Tester

Product by RFNetworks (Japan)

Tank Gauging System Interface Unit

Product by Tokyo Keiso (Japan)

Fiber Laser Projector

Product by NEOARK (Japan)

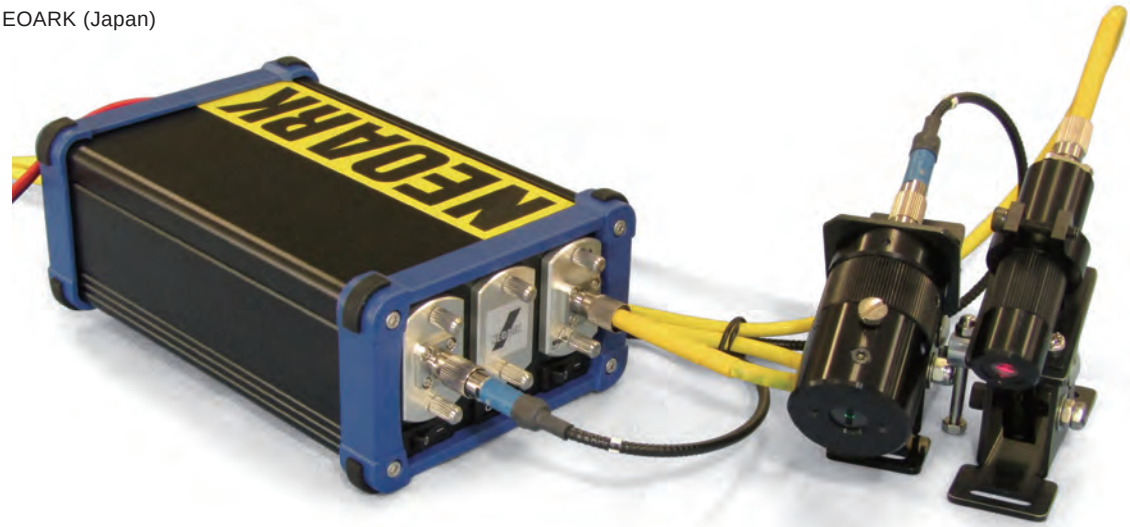

Desktop Load Cell Amplifier

Product by IMADA (Japan)

Magnet Elongation Measurement System

Product by Taikou Testing Equipment Industry (Japan)

Peristaltic DC Pump

Product by Technic (USA)

Multi-Show Controller

Product by Kuwatec (Japan)

EXPT series ALUMINIUM PANEL CASE with TILT LEG

NEW

■ Aluminium enclosure with tilt leg for measurement instrument use. Available in 30 different sizes and 16 different color combinations.

Components

No.	Part name	Pcs	Material	Color / Finish
1	Panel	2	Aluminium A1100P	Silver / Anodized • Black / Painted
2	Top cover	1	Extruded aluminium A6063S-T5	Silver • Black / Anodized with clear coating
3	Bottom cover	1	Extruded aluminium A6063S-T5	Silver • Black / Anodized with clear coating
4	Exterior frame	2	PC+ABS Flame-resistant	Black • Gray / Unpainted Indigo • Navy • Lime • Yellow • Orange • Red / Painted
5	Corner guard	8	Silicone	Dark gray • Black
6	Screw (Hexagonal)	8	Stainless steel	Unfinished
7	Tilt leg	1 set	PC+ABS UL94V-0, TPE	Black & Black • Navy & Gray • Light gray & Gray

■ See page 217 ~ 220 for Top / Bottom cover dimensions

Color Type

Code	SB Silver / Black	SG Silver / Gray	SI Silver / Indigo	SN Silver / Navy
Color				
Code	SL Silver / Lime	SY Silver / Yellow	SO Silver / Orange	SR Silver / Red
Color				
Code	BB Black / Black	BG Black / Gray	BI Black / Indigo	BN Black / Navy
Color				
Code	BL Black / Lime	BY Black / Yellow	BO Black / Orange	BR Black / Red
Color				

EXPT dimensions

■ DXF/DWG/PDF/STP drawings available on our website.

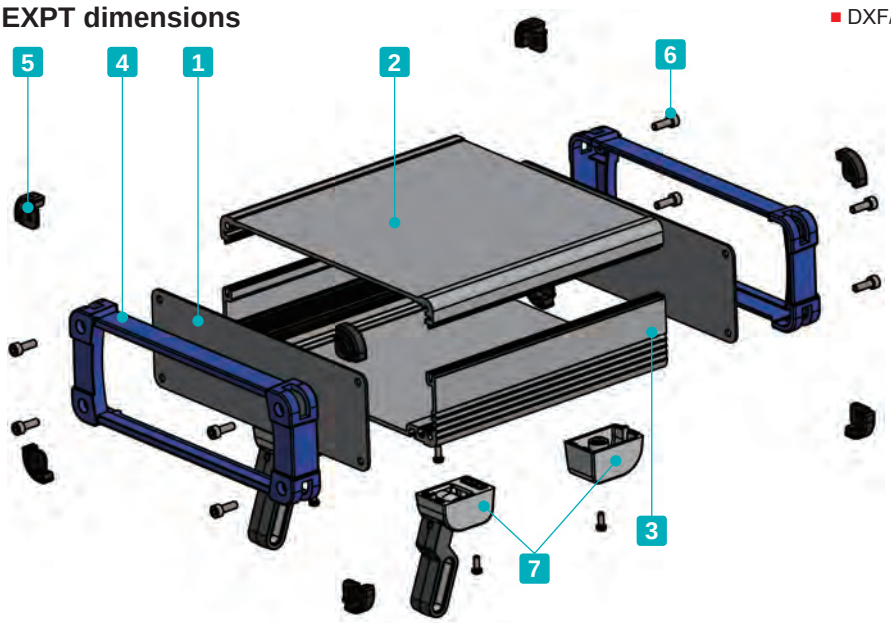

Included screws
EXPT20-□ models : M4-12 x 8 pcs
EXPT24-□, 30-□ models : M5-12 x 8 pcs
※Hexagonal wrench included.

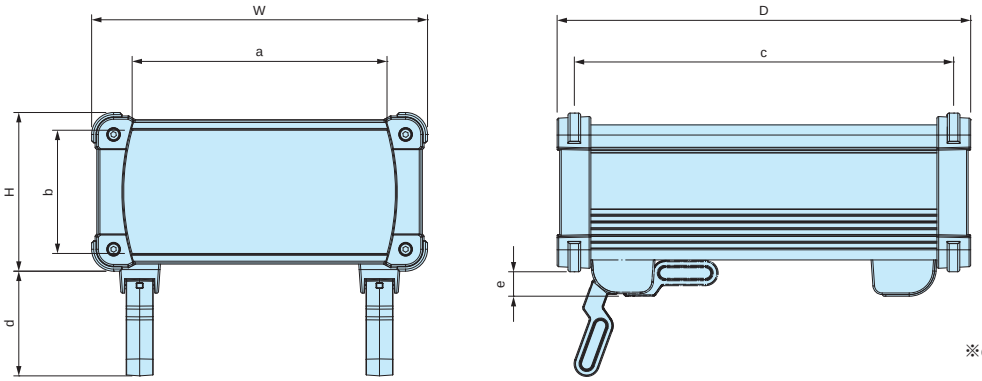

※c = Top / Bottom cover length.

Product no. / Dimensions

■ Please suffix color code at the end of the product number.

Product no.	External dimensions			Internal dimensions				
	W	H	D	a	b	c	d	e
EXPT20- 6-19□□	199	56	192	131	35	172	14.5	62
EXPT20- 6-25□□	199	56	245	131	35	225	14.5	62
EXPT20- 6-30□□	199	56	300	131	35	280	14.5	62
EXPT20- 7-19□□	199	74	192	131	53	172	14.5	62
EXPT20- 7-25□□	199	74	245	131	53	225	14.5	62
EXPT20- 7-30□□	199	74	300	131	53	280	14.5	62
EXPT20- 9-19□□	199	94	192	131	73	172	14.5	62
EXPT20- 9-25□□	199	94	245	131	73	225	14.5	62
EXPT20- 9-30□□	199	94	300	131	73	280	14.5	62
EXPT20-12-19□□	199	119	192	131	98	172	14.5	62
EXPT20-12-25□□	199	119	245	131	98	225	14.5	62
EXPT20-12-30□□	199	119	300	131	98	280	14.5	62
EXPT24- 6-17□□	244	64	170	176	43	147	14.5	62
EXPT24- 6-23□□	244	64	230	176	43	207	14.5	62
EXPT24- 6-29□□	244	64	290	176	43	267	14.5	62
EXPT24- 6-35□□	244	64	350	176	43	327	14.5	62
EXPT24- 9-17□□	244	89	170	176	68	147	14.5	62
EXPT24- 9-23□□	244	89	230	176	68	207	14.5	62
EXPT24- 9-29□□	244	89	290	176	68	267	14.5	62
EXPT24- 9-35□□	244	89	350	176	68	327	14.5	62
EXPT24-11-17□□	244	114	170	176	93	147	14.5	62
EXPT24-11-23□□	244	114	230	176	93	207	14.5	62
EXPT24-11-29□□	244	114	290	176	93	267	14.5	62
EXPT24-11-35□□	244	114	350	176	93	327	14.5	62
EXPT30- 9-25□□	300	90	250	230	68	228	14	61.5
EXPT30- 9-32□□	300	90	320	230	68	298	14	61.5
EXPT30- 9-40□□	300	90	400	230	68	378	14	61.5
EXPT30-14-25□□	300	140	250	230	118	228	14	61.5
EXPT30-14-32□□	300	140	320	230	118	298	14	61.5
EXPT30-14-40□□	300	140	400	230	118	378	14	61.5

■ Custom length is available

EXP series ALUMINIUM PANEL CASE with CORNER GUARD

NEW SIZE

- Corner guards are designed to be both aesthetically pleasing, and impact resistant.
- Available in 73 different sizes and 16 different color combinations.
- Custom length is available.

Included screws
EXP7-□, 9-□ models : M2.5-8 x 8 pcs
EXP12-□, 15-□ models : M3-10 x 8 pcs
EXP20-□ models : M4-12 x 8 pcs
EXP24-□, 30-□ models : M5-12 x 8 pcs
※Hexagonal wrench included.

Components

No.	Part name	Pcs	Material	Color / Finish
1	Panel	2	Aluminium A1100P	Silver / Anodized • Black / Painted
2	Top cover	1	Extruded aluminium A6063S-T5	Silver • Black / Anodized with clear coating
3	Bottom cover	1	Extruded aluminium A6063S-T5	Silver • Black / Anodized with clear coating
4	Exterior frame	2	PC+ABS Flame-resistant	Black • Gray / Unpainted Indigo • Navy • Lime • Yellow • Orange • Red / Painted
5	Corner guard	8	Silicone	Dark gray • Black
6	Screw (Hexagonal)	8	Stainless steel	Unfinished

■ See page 217 ~ 220 for Top / Bottom cover dimensions

Color Type

Code	SB Silver / Black	SG Silver / Gray	SI Silver / Indigo	SN Silver / Navy
Color				
Code	SL Silver / Lime	SY Silver / Yellow	SO Silver / Orange	SR Silver / Red
Color				
Code	BB Black / Black	BG Black / Gray	BI Black / Indigo	BN Black / Navy
Color				
Code	BL Black / Lime	BY Black / Yellow	BO Black / Orange	BR Black / Red
Color				

EXP dimensions

■ DXF/DWG/PDF/STP drawings available on our website.

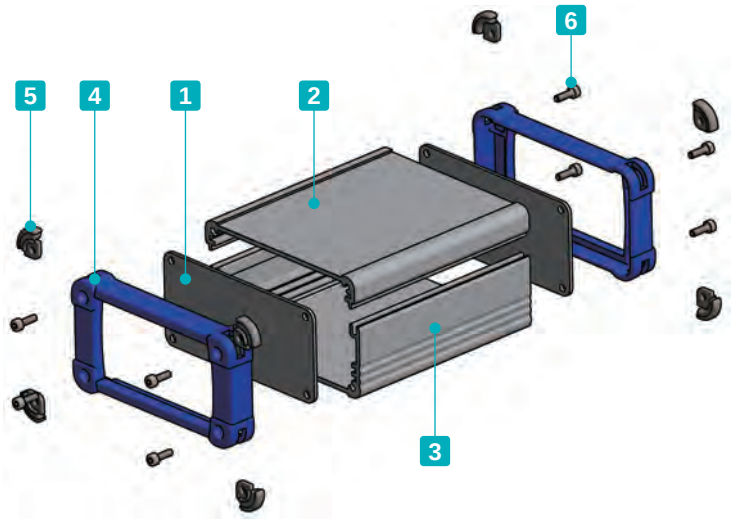

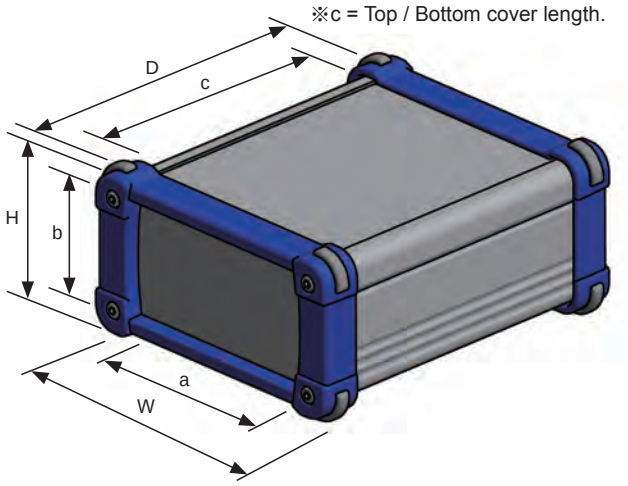

Product no. / Dimensions

■ Please suffix color code at the end of the product number.

Product no.	External dimensions			Internal dimensions		
	W	H	D	a	b	c
EXP 7- 3- 6□□	69	34	60	46	19.6	46
EXP 7- 3- 9□□	69	34	87	46	19.6	73
EXP 7- 3-11□□	69	34	110	46	19.6	96
EXP 7- 4- 6□□	69	44	60	46	29,6	46
EXP 7- 4- 9□□	69	44	87	46	29,6	73
EXP 7- 4-11□□	69	44	110	46	29,6	96
EXP 7- 6- 6□□	69	59	60	46	44.6	46
EXP 7- 6- 9□□	69	59	87	46	44.6	73
EXP 7- 6-11□□	69	59	110	46	44.6	96
EXP 9- 4- 7□□	89	39	70	66	24.6	56
EXP 9- 4-10□□	89	39	100	66	24.6	86
EXP 9- 4-13□□	89	39	130	66	24.6	116
EXP 9- 5- 7□□	89	49	70	66	34.6	56
EXP 9- 5-10□□	89	49	100	66	34.6	86
EXP 9- 5-13□□	89	49	130	66	34.6	116
EXP 9- 6- 7□□	89	64	70	66	49.6	56
EXP 9- 6-10□□	89	64	100	66	49.6	86
EXP 9- 6-13□□	89	64	130	66	49.6	116
EXP12- 4- 9□□	116	41	90	88	24	74
EXP12- 4-13□□	116	41	130	88	24	114
EXP12- 4-18□□	116	41	176	88	24	160
EXP12- 6- 9□□	116	56	90	88	39	74
EXP12- 6-13□□	116	56	130	88	39	114
EXP12- 6-18□□	116	56	176	88	39	160
EXP12- 7- 9□□	116	71	90	88	54	74
EXP12- 7-13□□	116	71	130	88	54	114
EXP12- 7-18□□	116	71	176	88	54	160
EXP15- 5-11□□	151	46	110	106.8	29	93
EXP15- 5-15□□	151	46	150	106.8	29	133
EXP15- 5-20□□	151	46	200	106.8	29	183
EXP15- 6-11□□	151	61	110	106.8	44	93
EXP15- 6-15□□	151	61	150	106.8	44	133
EXP15- 6-20□□	151	61	200	106.8	44	183
EXP15- 8-11□□	151	81	110	106.8	64	93
EXP15- 8-15□□	151	81	150	106.8	64	133
EXP15- 8-20□□	151	81	200	106.8	64	183
EXP15-10-11□□	151	101	110	106.8	84	93
EXP15-10-15□□	151	101	150	106.8	84	133
EXP15-10-20□□	151	101	200	106.8	84	183

Product no.	External dimensions			Internal dimensions		
	W	H	D	a	b	c
EXP20- 6-14□□	199	56	140	131	35	120
EXP20- 6-19□□	199	56	192	131	35	172
EXP20- 6-25□□	199	56	245	131	35	225
EXP20- 6-30□□	199	56	300	131	35	280
EXP20- 7-14□□	199	74	140	131	53	120
EXP20- 7-19□□	199	74	192	131	53	172
EXP20- 7-25□□	199	74	245	131	53	225
EXP20- 7-30□□	199	74	300	131	53	280
EXP20- 9-14□□	199	94	140	131	73	120
EXP20- 9-19□□	199	94	192	131	73	172
EXP20- 9-25□□	199	94	245	131	73	225
EXP20- 9-30□□	199	94	300	131	73	280
EXP20-12-14□□	199	119	140	131	98	120
EXP20-12-19□□	199	119	192	131	98	172
EXP20-12-25□□	199	119	245	131	98	225
EXP20-12-30□□	199	119	300	131	98	280
EXP24- 6-17□□	244	64	170	176	43	147
EXP24- 6-23□□	244	64	230	176	43	207
EXP24- 6-29□□	244	64	290	176	43	267
EXP24- 6-35□□	244	64	350	176	43	327
EXP24- 9-17□□	244	89	170	176	68	147
EXP24- 9-23□□	244	89	230	176	68	207
EXP24- 9-29□□	244	89	290	176	68	267
EXP24- 9-35□□	244	89	350	176	68	327
EXP24-11-17□□	244	114	170	176	93	147
EXP24-11-23□□	244	114	230	176	93	207
EXP24-11-29□□	244	114	290	176	93	267
EXP24-11-35□□	244	114	350	176	93	327
NEW EXP30- 9-25□□	300	90	250	230	68	228
NEW EXP30- 9-32□□	300	90	320	230	68	298
NEW EXP30- 9-40□□	300	90	400	230	68	378
NEW EXP30-14-25□□	300	140	250	230	118	228
NEW EXP30-14-32□□	300	140	320	230	118	298
NEW EXP30-14-40□□	300	140	400	230	118	378

■ Custom length is available

EXPE series ALUMINIUM EMC SHIELDED CASE with CORNER GUARD

NEW SIZE

EMC Shielding Effects

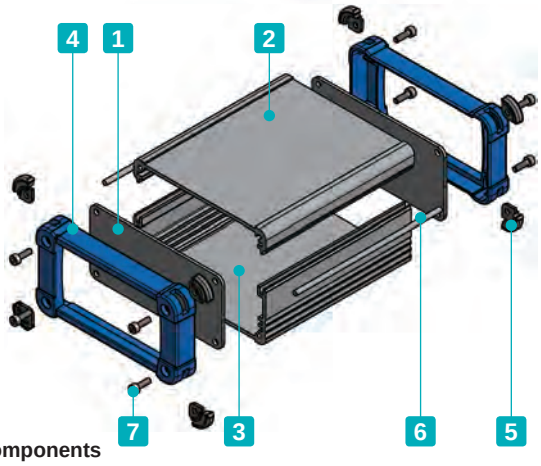

- Corner guards are designed to be both aesthetically pleasing, and impact resistant.
- Available in 73 different sizes and 8 different color combinations.
- EMC shielding is achieved by having the unfinished inner sides of the top/bottom covers and panels, as well as the fabric-over-foam gasket in contact with one another.

Included screws
EXPE7-□, 9-□ models : M2.5-8 x 8 pcs
EXPE12-□, 15-□ models : M3-10 x 8 pcs
EXPE20-□ models : M4-12 x 8 pcs
EXPE24-□, 30-□ models : M5-12 x 8 pcs
※Hexagonal wrench included.

Components

No.	Part name	Pcs	Material	Color / Finish
1	Panel	2	Aluminium A1100P	Metallic silver / Painted (Conductive inside)
2	Top cover	1	Extruded aluminium A6063S-T5	Metallic silver / Painted (Unfinished inside)
3	Bottom cover	1	Extruded aluminium A6063S-T5	Metallic silver / Painted (Unfinished inside)
4	Exterior frame	2	PC+ABS Flame-resistant	Black • Gray / Unpainted Indigo • Navy • Lime • Yellow • Orange • Red / Painted
5	Corner guard	8	Silicone	Dark gray • Black
6	Fabric-over-foam gasket	2	Conductive fabric : TPE	Metallic gray
7	Screw (Hexagonal)	8	Stainless steel	Unfinished

■ See page 217 ~ 220 for Top / Bottom cover dimensions

Color Type

Code	SB Silver / Black	SG Silver / Gray	SI Silver / Indigo	SN Silver / Navy
Color				
Code	**SL Silver / Lime**	**SY Silver / Yellow**	**SO Silver / Orange**	**SR Silver / Red**
Color				

EXPE dimensions

■ DXF/DWG/PDF/STP drawings available on our website.

※c = Top / Bottom cover length.

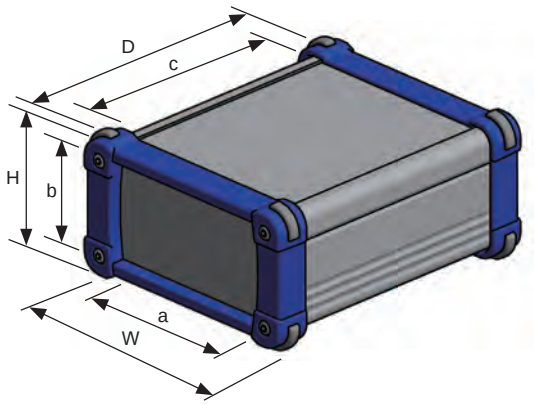

How to install shield gaskets

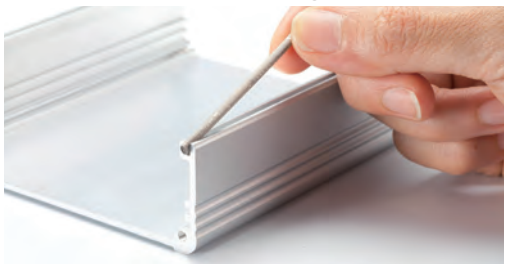

■ Insert fabric-over-foam gaskets into the joint-grooves on both sides of the bottom cover.

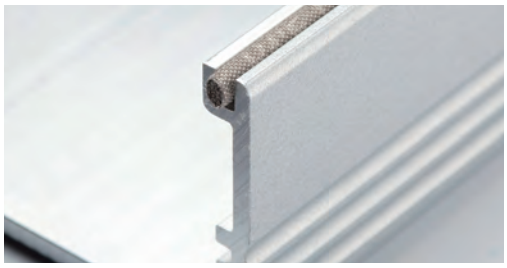

■ Ensure that a small portion of the fabric-over-foam gasket protrudes out in order to maintain connections with the end panels.

Product no. / Dimensions

■ Please suffix color code at the end of the product number.

Product no.	External dimensions			Internal dimensions		
	W	H	D	a	b	c
EXPE 7- 3- 6□□	69	34	60	46	19.6	46
EXPE 7- 3- 9□□	69	34	87	46	19.6	73
EXPE 7- 3-11□□	69	34	110	46	19.6	96
EXPE 7- 4- 6□□	69	44	60	46	29,6	46
EXPE 7- 4- 9□□	69	44	87	46	29,6	73
EXPE 7- 4-11□□	69	44	110	46	29,6	96
EXPE 7- 6- 6□□	69	59	60	46	44.6	46
EXPE 7- 6- 9□□	69	59	87	46	44.6	73
EXPE 7- 6-11□□	69	59	110	46	44.6	96
EXPE 9- 4- 7□□	89	39	70	66	24.6	56
EXPE 9- 4-10□□	89	39	100	66	24.6	86
EXPE 9- 4-13□□	89	39	130	66	24.6	116
EXPE 9- 5- 7□□	89	49	70	66	34.6	56
EXPE 9- 5-10□□	89	49	100	66	34.6	86
EXPE 9- 5-13□□	89	49	130	66	34.6	116
EXPE 9- 6- 7□□	89	64	70	66	49.6	56
EXPE 9- 6-10□□	89	64	100	66	49.6	86
EXPE 9- 6-13□□	89	64	130	66	49.6	116
EXPE12- 4- 9□□	116	41	90	88	24	74
EXPE12- 4-13□□	116	41	130	88	24	114
EXPE12- 4-18□□	116	41	176	88	24	160
EXPE12- 6- 9□□	116	56	90	88	39	74
EXPE12- 6-13□□	116	56	130	88	39	114
EXPE12- 6-18□□	116	56	176	88	39	160
EXPE12- 7- 9□□	116	71	90	88	54	74
EXPE12- 7-13□□	116	71	130	88	54	114
EXPE12- 7-18□□	116	71	176	88	54	160
EXPE15- 5-11□□	151	46	110	106.8	29	93
EXPE15- 5-15□□	151	46	150	106.8	29	133
EXPE15- 5-20□□	151	46	200	106.8	29	183
EXPE15- 6-11□□	151	61	110	106.8	44	93
EXPE15- 6-15□□	151	61	150	106.8	44	133
EXPE15- 6-20□□	151	61	200	106.8	44	183
EXPE15- 8-11□□	151	81	110	106.8	64	93
EXPE15- 8-15□□	151	81	150	106.8	64	133
EXPE15- 8-20□□	151	81	200	106.8	64	183
EXPE15-10-11□□	151	101	110	106.8	84	93
EXPE15-10-15□□	151	101	150	106.8	84	133
EXPE15-10-20□□	151	101	200	106.8	84	183

■ Custom length is available

Product no.	External dimensions			Internal dimensions		
	W	H	D	a	b	c
EXPE20- 6-14□□	199	56	140	131	35	120
EXPE20- 6-19□□	199	56	192	131	35	172
EXPE20- 6-25□□	199	56	245	131	35	225
EXPE20- 6-30□□	199	56	300	131	35	280
EXPE20- 7-14□□	199	74	140	131	53	120
EXPE20- 7-19□□	199	74	192	131	53	172
EXPE20- 7-25□□	199	74	245	131	53	225
EXPE20- 7-30□□	199	74	300	131	53	280
EXPE20- 9-14□□	199	94	140	131	73	120
EXPE20- 9-19□□	199	94	192	131	73	172
EXPE20- 9-25□□	199	94	245	131	73	225
EXPE20- 9-30□□	199	94	300	131	73	280
EXPE20-12-14□□	199	119	140	131	98	120
EXPE20-12-19□□	199	119	192	131	98	172
EXPE20-12-25□□	199	119	245	131	98	225
EXPE20-12-30□□	199	119	300	131	98	280
EXPE24- 6-17□□	244	64	170	176	43	147
EXPE24- 6-23□□	244	64	230	176	43	207
EXPE24- 6-29□□	244	64	290	176	43	267
EXPE24- 6-35□□	244	64	350	176	43	327
EXPE24- 9-17□□	244	89	170	176	68	147
EXPE24- 9-23□□	244	89	230	176	68	207
EXPE24- 9-29□□	244	89	290	176	68	267
EXPE24- 9-35□□	244	89	350	176	68	327
EXPE24-11-17□□	244	114	170	176	93	147
EXPE24-11-23□□	244	114	230	176	93	207
EXPE24-11-29□□	244	114	290	176	93	267
EXPE24-11-35□□	244	114	350	176	93	327
NEW EXPE30- 9-25□□	300	90	250	230	68	228
NEW EXPE30- 9-32□□	300	90	320	230	68	298
NEW EXPE30- 9-40□□	300	90	400	230	68	378
NEW EXPE30-14-25□□	300	140	250	230	118	228
NEW EXPE30-14-32□□	300	140	320	230	118	298
NEW EXPE30-14-40□□	300	140	400	230	118	378

Following models are suitable for Mini-ITX board size.
EXPE20-7-19□□
EXPE20-9-19□□
EXPE20-12-19□□

EXW series IP65 ALUMINIUM CASE with CORNER GUARD

- IP65 is made possible by the sealing of between top & bottom covers and end panels with gaskets.
- Available in 39 different sizes and 6 different color combinations by 2 body frame and 3 end panel colors.
- Custom length is available.

Technical Data
Protection class : IP65 ■ Not suitable for environments with direct rainfall.

Included screws
EXW7-□, 9-□ models : M2.5-8 x 8 pcs
EXW12-□, 15-□ models: M3-10 x 8 pcs
※Hexagonal wrench included.

Components

No.	Part name	Pcs	Material	Color / Finish
1	Panel	2	PC+ABS Flame-resistant	Black • Gray / Unpainted Navy / Painted
2	Top cover	1	Extruded aluminium A6063S-T5	Silver • Black / Anodized with clear coating
3	Bottom cover	1	Extruded aluminium A6063S-T5	Silver • Black / Anodized with clear coating
4	Panel gasket	2	Silicone	Charcoal gray*
5	Cover gasket	2	Silicone sponge	White gray
6	Screw (Hexagonal)	8	Stainless steel	Unfinished

*Dark gray and black color panel gasket will be changed to charcoal gray upon depletion of inventory.

■ See page 217 ~ 220 for Top / Bottom cover dimensions

Color Type

Code	SB Silver / Black	SG Silver / Gray	SN Silver / Navy
Color			
Code	**BB Black / Black**	**BG Black / Gray**	**BN Black / Navy**
Color			

EXW dimensions

■ DXF/DWG/PDF/STP drawings available on our website.
※c = Top / Bottom cover length.

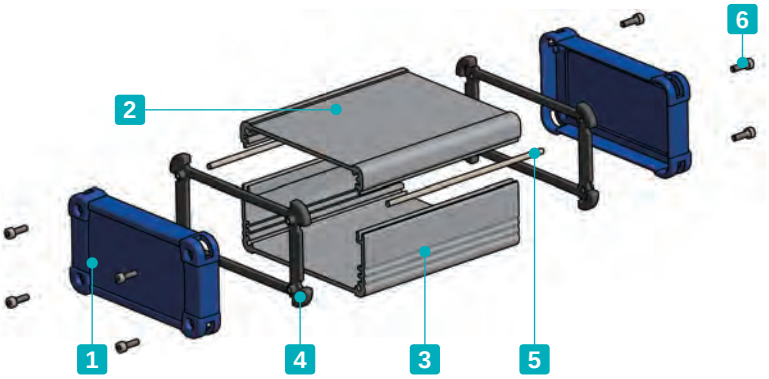

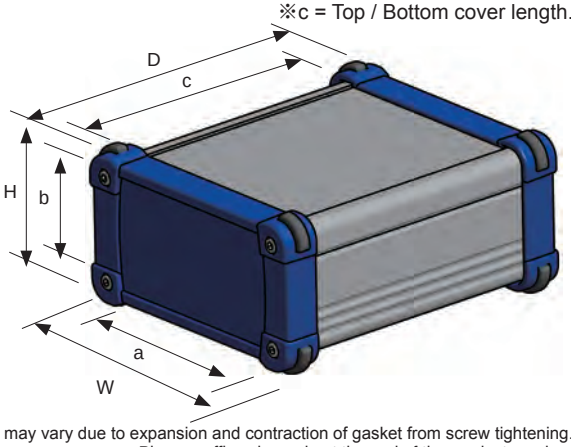

Product no. / Dimensions

■ Listed D dimension may vary due to expansion and contraction of gasket from screw tightening.
■ Please suffix color code at the end of the product number.

Product no.	External dimensions			Internal dimensions		
	W	H	D	a	b	c
EXW 7- 3- 6□□	69	34	57	47	20	46
EXW 7- 3- 9□□	69	34	84	47	20	73
EXW 7- 3-11□□	69	34	107	47	20	96
EXW 7- 4- 6□□	69	44	57	47	30	46
EXW 7- 4- 9□□	69	44	84	47	30	73
EXW 7- 4-11□□	69	44	107	47	30	96
EXW 7- 6- 6□□	69	59	57	47	45	46
EXW 7- 6- 9□□	69	59	84	47	45	73
EXW 7- 6-11□□	69	59	107	47	45	96
EXW 9- 4- 7□□	89	39	68	67	25	56
EXW 9- 4-10□□	89	39	98	67	25	86
EXW 9- 4-13□□	89	39	128	67	25	116
EXW 9- 5- 7□□	89	49	68	67	35	56
EXW 9- 5-10□□	89	49	98	67	35	86
EXW 9- 5-13□□	89	49	128	67	35	116
EXW 9- 6- 7□□	89	64	68	67	50	56
EXW 9- 6-10□□	89	64	98	67	50	86
EXW 9- 6-13□□	89	64	128	67	50	116
EXW12- 4- 9□□	116	41	87	89	24	74
EXW12- 4-13□□	116	41	127	89	24	114
EXW12- 4-18□□	116	41	173	89	24	160
EXW12- 6- 9□□	116	56	87	89	39	74
EXW12- 6-13□□	116	56	127	89	39	114
EXW12- 6-18□□	116	56	173	89	39	160
EXW12- 7- 9□□	116	71	87	89	54	74
EXW12- 7-13□□	116	71	127	89	54	114
EXW12- 7-18□□	116	71	173	89	54	160
EXW15- 5-11□□	151	46	106	107	29	93
EXW15- 5-15□□	151	46	146	107	29	133
EXW15- 5-20□□	151	46	196	107	29	183
EXW15- 6-11□□	151	61	106	107	44	93
EXW15- 6-15□□	151	61	146	107	44	133
EXW15- 6-20□□	151	61	196	107	44	183
EXW15- 8-11□□	151	81	106	107	64	93
EXW15- 8-15□□	151	81	146	107	64	133
EXW15- 8-20□□	151	81	196	107	64	183
EXW15-10-11□□	151	101	106	107	84	93
EXW15-10-15□□	151	101	146	107	84	133
EXW15-10-20□□	151	101	196	107	84	183

■ Custom length is available

How to install cover gaskets

■ Insert cover gaskets into the joint-grooves on both sides of the bottom cover.

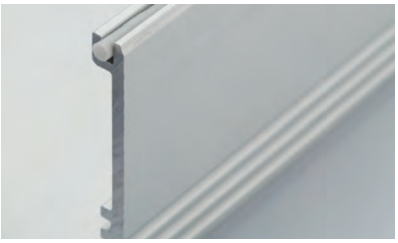

■ Ensure that a small portion of the cover gaskets protrude out in order to maintain connections with the end panels.

EXPF series FLANGED ALUMINIUM PANEL CASE

- Equipped with flanged frame for easy wall mounting.
- Available in 67 different sizes and 6 different color combinations by 2 body frame and 3 end panel colors.
- Custom length is available.

Included screws
EXPF 7-□, 9-□ models : M2.5-8 x 8 pcs
EXPF11-□, 15-□ models : M3-10 x 8 pcs
EXPF20-□ models : M4-12 x 8 pcs
EXPF24-□ models : M5-12 x 8 pcs
※Hexagonal wrench included.

Components

No.	Part name	Pcs	Material	Color / Finish
1	Panel	2	Aluminium A1100P	Silver / Anodized • Black / Painted
2	Top cover	1	Extruded aluminium A6063S-T5	Silver • Black / Anodized with clear coating
3	Bottom cover	1	Extruded aluminium A6063S-T5	Silver • Black / Anodized with clear coating
4	Flanged frame	2	PC+ABS Flame-resistant	Black • Gray / Unpainted Navy / Painted
5	Screw (Hexagonal)	8	Stainless steel	Unfinished

■ See page 217 ~ 220 for Top / Bottom cover dimensions

Color Type

Code	SB Silver / Black	SG Silver / Gray	SN Silver / Navy
Color			
Code	**BB Black / Black**	**BG Black / Gray**	**BN Black / Navy**
Color			

EXPF dimensions

■ DXF/DWG/PDF/STP drawings available on our website.

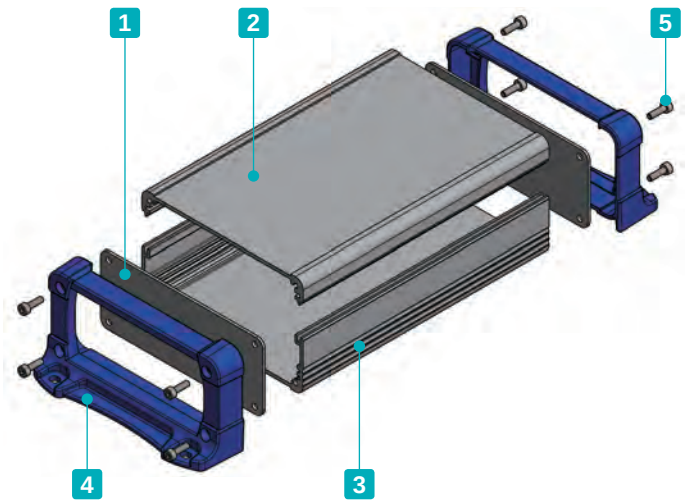

※c = Top / Bottom cover length.

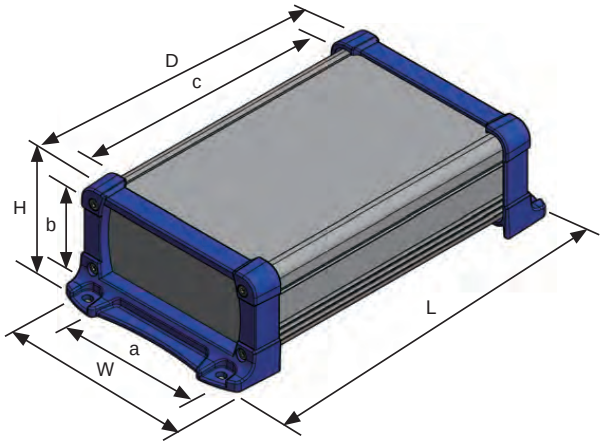

Product no. / Dimensions

■ Please suffix color code at the end of the product number.

Product no.	External dimensions				Internal dimensions		
	W	H	D	L	a	b	c
EXPF 7- 3- 6□□	66	34	60	84	46	19.6	46
EXPF 7- 3- 9□□	66	34	87	111	46	19.6	73
EXPF 7- 3-11□□	66	34	110	134	46	19.6	96
EXPF 7- 4- 6□□	66	44	60	84	46	29.6	46
EXPF 7- 4- 9□□	66	44	87	111	46	29.6	73
EXPF 7- 4-11□□	66	44	110	134	46	29.6	96
EXPF 7- 6- 6□□	66	59	60	84	46	44.6	46
EXPF 7- 6- 9□□	66	59	87	111	46	44.6	73
EXPF 7- 6-11□□	66	59	110	134	46	44.6	96
EXPF 9- 4- 7□□	86	39	70	95.8	66	24.6	56
EXPF 9- 4-10□□	86	39	100	125.8	66	24.6	86
EXPF 9- 4-13□□	86	39	130	155.8	66	24.6	116
EXPF 9- 5- 7□□	86	49	70	95.8	66	34.6	56
EXPF 9- 5-10□□	86	49	100	125.8	66	34.6	86
EXPF 9- 5-13□□	86	49	130	155.8	66	34.6	116
EXPF 9- 6- 7□□	86	64	70	95.8	66	49.6	56
EXPF 9- 6-10□□	86	64	100	125.8	66	49.6	86
EXPF 9- 6-13□□	86	64	130	155.8	66	49.6	116
EXPF11- 4- 9□□	113	41.5	90	121.8	88	24	74
EXPF11- 4-13□□	113	41.5	130	161.8	88	24	114
EXPF11- 4-18□□	113	41.5	176	207.8	88	24	160
EXPF11- 6- 9□□	113	56.5	90	121.8	88	39	74
EXPF11- 6-13□□	113	56.5	130	161.8	88	39	114
EXPF11- 6-18□□	113	56.5	176	207.8	88	39	160
EXPF11- 7- 9□□	113	71.5	90	121.8	88	54	74
EXPF11- 7-13□□	113	71.5	130	161.8	88	54	114
EXPF11- 7-18□□	113	71.5	176	207.8	88	54	160
EXPF15- 5-11□□	148	47	110	149.2	106.8	29	93
EXPF15- 5-15□□	148	47	150	189.2	106.8	29	133
EXPF15- 5-20□□	148	47	200	239.2	106.8	29	183
EXPF15- 6-11□□	148	62	110	149.2	106.8	44	93
EXPF15- 6-15□□	148	62	150	189.2	106.8	44	133
EXPF15- 6-20□□	148	62	200	239.2	106.8	44	183
EXPF15- 8-11□□	148	82	110	149.2	106.8	64	93
EXPF15- 8-15□□	148	82	150	189.2	106.8	64	133
EXPF15- 8-20□□	148	82	200	239.2	106.8	64	183
EXPF15-10-11□□	148	102	110	149.2	106.8	84	93
EXPF15-10-15□□	148	102	150	189.2	106.8	84	133
EXPF15-10-20□□	148	102	200	239.2	106.8	84	183

Product no.	External dimensions				Internal dimensions		
	W	H	D	L	a	b	c
EXPF20- 6-14□□	195	57	140	188.6	131	35	120
EXPF20- 6-19□□	195	57	192	240.6	131	35	172
EXPF20- 6-25□□	195	57	245	293.6	131	35	225
EXPF20- 6-30□□	195	57	300	348.6	131	35	280
EXPF20- 8-14□□	195	75	140	188.6	131	53	120
EXPF20- 8-19□□	195	75	192	240.6	131	53	172
EXPF20- 8-25□□	195	75	245	293.6	131	53	225
EXPF20- 8-30□□	195	75	300	348.6	131	53	280
EXPF20-10-14□□	195	95	140	188.6	131	73	120
EXPF20-10-19□□	195	95	192	240.6	131	73	172
EXPF20-10-25□□	195	95	245	293.6	131	73	225
EXPF20-10-30□□	195	95	300	348.6	131	73	280
EXPF20-12-14□□	195	120	140	188.6	131	98	120
EXPF20-12-19□□	195	120	192	240.6	131	98	172
EXPF20-12-25□□	195	120	245	293.6	131	98	225
EXPF20-12-30□□	195	120	300	348.6	131	98	280
EXPF24- 7-17□□	240	65	170	218.6	176	43	147
EXPF24- 7-23□□	240	65	230	278.6	176	43	207
EXPF24- 7-29□□	240	65	290	338.6	176	43	267
EXPF24- 7-35□□	240	65	350	398.6	176	43	327
EXPF24- 9-17□□	240	90	170	218.6	176	68	147
EXPF24- 9-23□□	240	90	230	278.6	176	68	207
EXPF24- 9-29□□	240	90	290	338.6	176	68	267
EXPF24- 9-35□□	240	90	350	398.6	176	68	327
EXPF24-12-17□□	240	115	170	218.6	176	93	147
EXPF24-12-23□□	240	115	230	278.6	176	93	207
EXPF24-12-29□□	240	115	290	338.6	176	93	267
EXPF24-12-35□□	240	115	350	398.6	176	93	327

■ Custom length is available.

Following models are suitable for Mini-ITX board size.

EXPF20-8-19□□

EXPF20-10-19□□

EXPF20-12-19□□

EXEF series FLANGED ALUMINIUM EMC SHIELDED CASE

EMC Shielding Effects

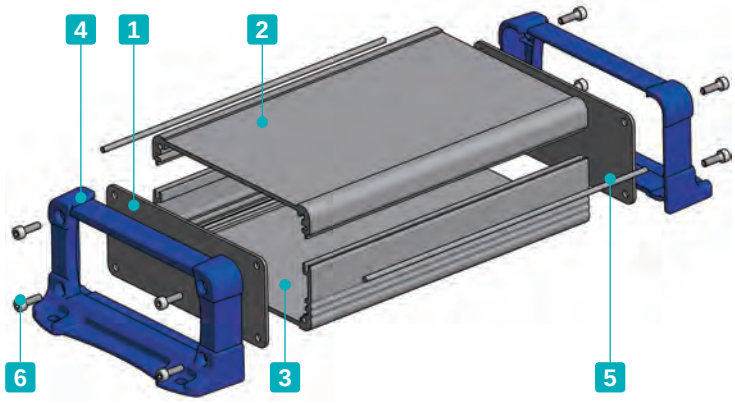

- EMC shielding is achieved by having the unfinished inner sides of the top/bottom covers and panels, as well as the fabric-over-foam gasket in contact with one another.
- Equipped with flanged frame for easy wall mounting.
- Available in 67 different sizes and 3 different color combinations.

Included screws
EXEF7-□, 9-□ models : M2.5-8 x 8 pcs
EXEF11-□, 15-□ models : M3-10 x 8 pcs
EXEF20-□ models : M4-12 x 8 pcs
EXEF24-□ models : M5-12 x 8 pcs
※Hexagonal wrench included.

Components

No.	Part name	Pcs	Material	Color / Finish
1	Panel	2	Aluminium A1100P	Metallic silver / Painted (Conductive inside)
2	Top cover	1	Extruded aluminium A6063S-T5	Metallic silver / Painted (Unfinished inside)
3	Bottom cover	1	Extruded aluminium A6063S-T5	Metallic silver / Painted (Unfinished inside)
4	Flanged frame	2	PC+ABS Flame-resistant	Black • Gray / Unpainted Navy / Painted
5	Fabric-over-foam gasket	2	Conductive fabric : TPE	Metallic gray
6	Screw (Hexagonal)	8	Stainless steel	Unfinished

■ See page 217 ~ 220 for Top / Bottom cover dimensions

Color Type

Code	SB Silver / Black	SG Silver / Gray	SN Silver / Navy
Color			

EXEF dimensions

※c = Top / Bottom cover length.

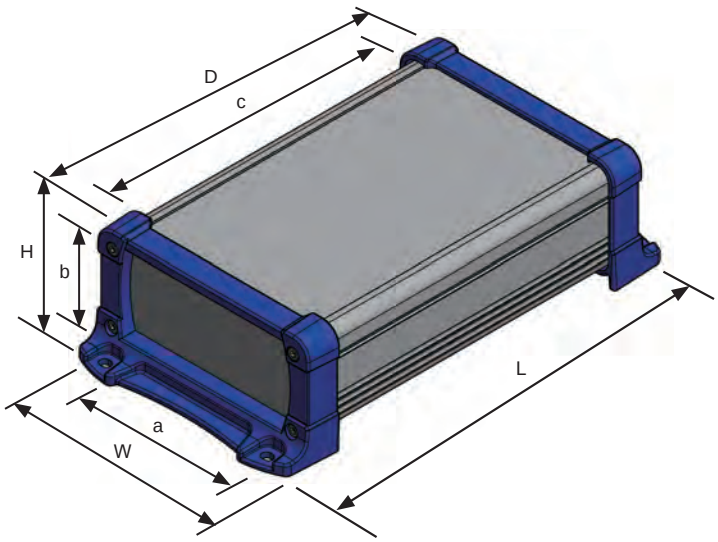

■ DXF/DWG/PDF/STP drawings available on our website.

How to install shield gaskets

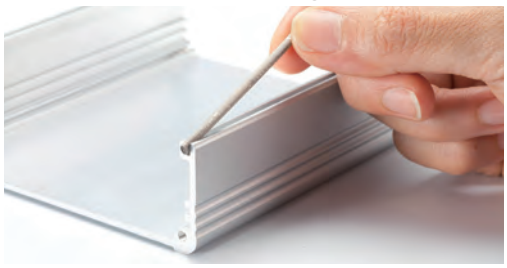

■ Insert fabric-over-foam gaskets into the joint-grooves on both sides of the bottom cover.

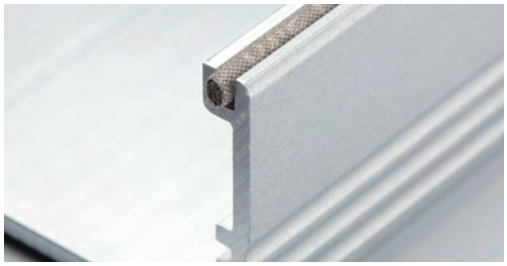

■ Ensure that a small portion of the fabric-over-foam gaskets protrude out in order to maintain connections with the end panels.

Product no. / Dimensions

■ Please suffix color code at the end of the product number.

Product no.	External dimensions				Internal dimensions		
	W	H	D	L	a	b	c
EXEF 7- 3- 6□□	66	34	60	84	46	19.6	46
EXEF 7- 3- 9□□	66	34	87	111	46	19.6	73
EXEF 7- 3-11□□	66	34	110	134	46	19.6	96
EXEF 7- 4- 6□□	66	44	60	84	46	29.6	46
EXEF 7- 4- 9□□	66	44	87	111	46	29.6	73
EXEF 7- 4-11□□	66	44	110	134	46	29.6	96
EXEF 7- 6- 6□□	66	59	60	84	46	44.6	46
EXEF 7- 6- 9□□	66	59	87	111	46	44.6	73
EXEF 7- 6-11□□	66	59	110	134	46	44.6	96
EXEF 9- 4- 7□□	86	39	70	95.8	66	24.6	56
EXEF 9- 4-10□□	86	39	100	125.8	66	24.6	86
EXEF 9- 4-13□□	86	39	130	155.8	66	24.6	116
EXEF 9- 5- 7□□	86	49	70	95.8	66	34.6	56
EXEF 9- 5-10□□	86	49	100	125.8	66	34.6	86
EXEF 9- 5-13□□	86	49	130	155.8	66	34.6	116
EXEF 9- 6- 7□□	86	64	70	95.8	66	49.6	56
EXEF 9- 6-10□□	86	64	100	125.8	66	49.6	86
EXEF 9- 6-13□□	86	64	130	155.8	66	49.6	116
EXEF11- 4- 9□□	113	41.5	90	121.8	88	24	74
EXEF11- 4-13□□	113	41.5	130	161.8	88	24	114
EXEF11- 4-18□□	113	41.5	176	207.8	88	24	160
EXEF11- 6- 9□□	113	56.5	90	121.8	88	39	74
EXEF11- 6-13□□	113	56.5	130	161.8	88	39	114
EXEF11- 6-18□□	113	56.5	176	207.8	88	39	160
EXEF11- 7- 9□□	113	71.5	90	121.8	88	54	74
EXEF11- 7-13□□	113	71.5	130	161.8	88	54	114
EXEF11- 7-18□□	113	71.5	176	207.8	88	54	160
EXEF15- 5-11□□	148	47	110	149.2	106.8	29	93
EXEF15- 5-15□□	148	47	150	189.2	106.8	29	133
EXEF15- 5-20□□	148	47	200	239.2	106.8	29	183
EXEF15- 6-11□□	148	62	110	149.2	106.8	44	93
EXEF15- 6-15□□	148	62	150	189.2	106.8	44	133
EXEF15- 6-20□□	148	62	200	239.2	106.8	44	183
EXEF15- 8-11□□	148	82	110	149.2	106.8	64	93
EXEF15- 8-15□□	148	82	150	189.2	106.8	64	133
EXEF15- 8-20□□	148	82	200	239.2	106.8	64	183
EXEF15-10-11□□	148	102	110	149.2	106.8	84	93
EXEF15-10-15□□	148	102	150	189.2	106.8	84	133
EXEF15-10-20□□	148	102	200	239.2	106.8	84	183

Product no.	External dimensions				Internal dimensions		
	W	H	D	L	a	b	c
EXEF20- 6-14□□	195	57	140	188.6	131	35	120
EXEF20- 6-19□□	195	57	192	240.6	131	35	172
EXEF20- 6-25□□	195	57	245	293.6	131	35	225
EXEF20- 6-30□□	195	57	300	348.6	131	35	280
EXEF20- 8-14□□	195	75	140	188.6	131	53	120
EXEF20- 8-19□□	195	75	192	240.6	131	53	172
EXEF20- 8-25□□	195	75	245	293.6	131	53	225
EXEF20- 8-30□□	195	75	300	348.6	131	53	280
EXEF20-10-14□□	195	95	140	188.6	131	73	120
EXEF20-10-19□□	195	95	192	240.6	131	73	172
EXEF20-10-25□□	195	95	245	293.6	131	73	225
EXEF20-10-30□□	195	95	300	348.6	131	73	280
EXEF20-12-14□□	195	120	140	188.6	131	98	120
EXEF20-12-19□□	195	120	192	240.6	131	98	172
EXEF20-12-25□□	195	120	245	293.6	131	98	225
EXEF20-12-30□□	195	120	300	348.6	131	98	280
EXEF24- 7-17□□	240	65	170	218.6	176	43	147
EXEF24- 7-23□□	240	65	230	278.6	176	43	207
EXEF24- 7-29□□	240	65	290	338.6	176	43	267
EXEF24- 7-35□□	240	65	350	398.6	176	43	327
EXEF24- 9-17□□	240	90	170	218.6	176	68	147
EXEF24- 9-23□□	240	90	230	278.6	176	68	207
EXEF24- 9-29□□	240	90	290	338.6	176	68	267
EXEF24- 9-35□□	240	90	350	398.6	176	68	327
EXEF24-12-17□□	240	115	170	218.6	176	93	147
EXEF24-12-23□□	240	115	230	278.6	176	93	207
EXEF24-12-29□□	240	115	290	338.6	176	93	267
EXEF24-12-35□□	240	115	350	398.6	176	93	327

Following models are suitable for Mini-ITX board size.

EXEF20-8-19□□

EXEF20-10-19□□

EXEF20-12-19□□

EXWF series IP65 FLANGED ALUMINIUM CASE

NEW SIZE

IP65 IP54

- Waterproof case available in 73 different sizes and 6 different color combinations.
- Equipped with flanged frame for easy wall mounting. Suitable to be used as wall mounted controller and transmitter.
- Custom length is available.

Technical Data

Protection class : IP65 • IP54
Protection class varies by size.
■ Not suitable for environments with direct rainfall.

Included screws
EXWF7-□, 9-□ models : M2.5-8 x 8 pcs
EXWF11-□, 15-□ models : M3-10 x 8 pcs
EXWF20-□ models : M4-12 x 8 pcs
EXWF24-□, 30-□ models : M5-12 x 8 pcs
※Hexagonal wrench included.

Components

■ See page 217 ~ 220 for Top / Bottom cover dimensions.

No.	Part name	Pcs	Material	Color / Finish
1	Flanged end panel	2	PC+ABS Flame-resistant	Black • Gray / Unpainted Navy / Painted
2	Top cover	1	Extruded aluminium A6063S-T5	Silver • Black / Anodized with clear coating
3	Bottom cover	1	Extruded aluminium A6063S-T5	Silver • Black / Anodized with clear coating
4	Panel gasket	2	Silicone • EPDM sponge	Black
5	Cover gasket	2	Silicone sponge	White gray
6	Screw (Hexagonal)	8	Stainless steel	Unfinished
–	O-ring*	8	NBR	Black

*O-ring is only available for EXWF20-□, 24-□, and 30-□ models.

■ Panel gasket material : Silicone : EXWF7-□ ~ 15-□ models • EPDM sponge : EXWF20-□ ~ 30-□ models.

Color Type

Code	S B Silver / Black	S G Silver / Gray	S N Silver / Navy
Color			
Code	**B B Black / Black**	**B G Black / Gray**	**B N Black / Navy**
Color			

EXWF dimensions

■ DXF/DWG/PDF/STP drawings available on our website.

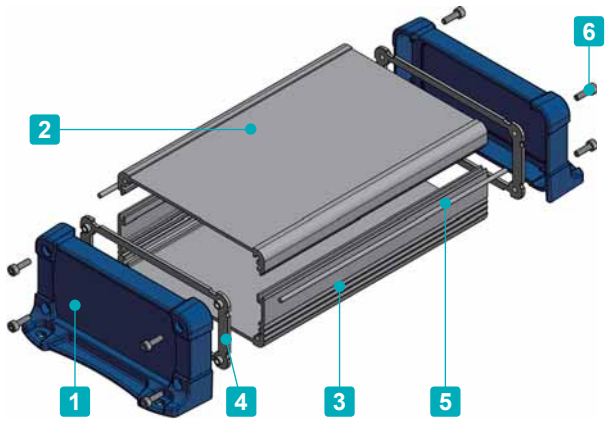

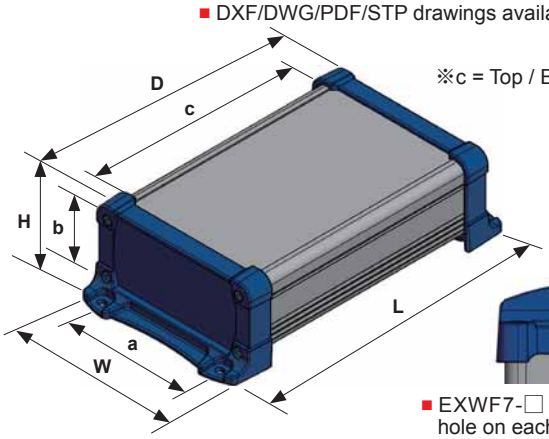

※c = Top / Bottom cover length.

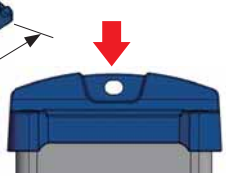

■ EXWF7-□ models have one hole on each flanged end panel

■ Listed D dimension may vary due to expansion and contraction of gasket from screw tightening.

■ Please suffix color code at the end of the product number.

Product no. / Dimensions

Product no.	IP Code	External dimensions				Internal dimensions		
		W	H	D	L	a	b	c
EXWF 7- 3- 6□□	IP65	66	34	57	82	47	20	46
EXWF 7- 3- 9□□	IP65	66	34	84	109	47	20	73
EXWF 7- 3-11□□	IP65	66	34	107	132	47	20	96
EXWF 7- 4- 6□□	IP65	66	44	57	82	47	30	46
EXWF 7- 4- 9□□	IP65	66	44	84	109	47	30	73
EXWF 7- 4-11□□	IP65	66	44	107	132	47	30	96
EXWF 7- 6- 6□□	IP65	66	59	57	82	47	45	46
EXWF 7- 6- 9□□	IP65	66	59	84	109	47	45	73
EXWF 7- 6-11□□	IP65	66	59	107	132	47	45	96
EXWF 9- 4- 7□□	IP65	86	39	68	94.8	67	25	56
EXWF 9- 4-10□□	IP65	86	39	98	124.8	67	25	86
EXWF 9- 4-13□□	IP65	86	39	128	154.8	67	25	116
EXWF 9- 5- 7□□	IP65	86	49	68	94.8	67	35	56
EXWF 9- 5-10□□	IP65	86	49	98	124.8	67	35	86
EXWF 9- 5-13□□	IP65	86	49	128	154.8	67	35	116
EXWF 9- 6- 7□□	IP65	86	64	68	94.8	67	50	56
EXWF 9- 6-10□□	IP65	86	64	98	124.8	67	50	86
EXWF 9- 6-13□□	IP65	86	64	128	154.8	67	50	116
EXWF11- 4- 9□□	IP65	113	41.5	87	119.8	89	24	74
EXWF11- 4-13□□	IP65	113	41.5	127	159.8	89	24	114
EXWF11- 4-17□□	IP65	113	41.5	173	205.8	89	24	160
EXWF11- 6- 9□□	IP65	113	56.5	87	119.8	89	39	74
EXWF11- 6-13□□	IP65	113	56.5	127	159.8	89	39	114
EXWF11- 6-17□□	IP65	113	56.5	173	205.8	89	39	160
EXWF11- 7- 9□□	IP65	113	71.5	87	119.8	89	54	74
EXWF11- 7-13□□	IP65	113	71.5	127	159.8	89	54	114
EXWF11- 7-17□□	IP65	113	71.5	173	205.8	89	54	160
EXWF15- 5-11□□	IP65	148	47	106	146.2	107	29	93
EXWF15- 5-15□□	IP65	148	47	146	186.2	107	29	133
EXWF15- 5-20□□	IP65	148	47	196	236.2	107	29	183
EXWF15- 6-11□□	IP65	148	62	106	146.2	107	44	93
EXWF15- 6-15□□	IP65	148	62	146	186.2	107	44	133
EXWF15- 6-20□□	IP65	148	62	196	236.2	107	44	183
EXWF15- 8-11□□	IP65	148	82	106	146.2	107	64	93
EXWF15- 8-15□□	IP65	148	82	146	186.2	107	64	133
EXWF15- 8-20□□	IP65	148	82	196	236.2	107	64	183
EXWF15-10-11□□	IP65	148	102	106	146.2	107	84	93
EXWF15-10-15□□	IP65	148	102	146	186.2	107	84	133
EXWF15-10-20□□	IP65	148	102	196	236.2	107	84	183

Product no.	IP Code	External dimensions				Internal dimensions		
		W	H	D	L	a	b	c
EXWF20- 6-14□□	IP54	195	57	138	186.6	132	35	120
EXWF20- 6-19□□	IP54	195	57	190	238.6	132	35	172
EXWF20- 6-25□□	IP54	195	57	243	291.6	132	35	225
EXWF20- 6-30□□	IP54	195	57	298	346.6	132	35	280
EXWF20- 8-14□□	IP54	195	75	138	186.6	132	53	120
EXWF20- 8-19□□	IP54	195	75	190	238.6	132	53	172
EXWF20- 8-25□□	IP54	195	75	243	291.6	132	53	225
EXWF20- 8-30□□	IP54	195	75	298	346.6	132	53	280
EXWF20-10-14□□	IP54	195	95	138	186.6	132	73	120
EXWF20-10-19□□	IP54	195	95	190	238.6	132	73	172
EXWF20-10-25□□	IP54	195	95	243	291.6	132	73	225
EXWF20-10-30□□	IP54	195	95	298	346.6	132	73	280
EXWF20-12-14□□	IP54	195	120	138	186.6	132	98	120
EXWF20-12-19□□	IP54	195	120	190	238.6	132	98	172
EXWF20-12-25□□	IP54	195	120	243	291.6	132	98	225
EXWF20-12-30□□	IP54	195	120	298	346.6	132	98	280
EXWF24- 7-17□□	IP54	240	65	165	213.6	177	43	147
EXWF24- 7-23□□	IP54	240	65	225	273.6	177	43	207
EXWF24- 7-29□□	IP54	240	65	285	333.6	177	43	267
EXWF24- 7-35□□	IP54	240	65	345	393.6	177	43	327
EXWF24- 9-17□□	IP54	240	90	165	213.6	177	68	147
EXWF24- 9-23□□	IP54	240	90	225	273.6	177	68	207
EXWF24- 9-29□□	IP54	240	90	285	333.6	177	68	267
EXWF24- 9-35□□	IP54	240	90	345	393.6	177	68	327
EXWF24-12-17□□	IP54	240	115	165	213.6	177	93	147
EXWF24-12-23□□	IP54	240	115	225	273.6	177	93	207
EXWF24-12-29□□	IP54	240	115	285	333.6	177	93	267
EXWF24-12-35□□	IP54	240	115	345	393.6	177	93	327
NEW EXWF30- 9-25□□	IP54	298	93	247	295.6	231	68	228
NEW EXWF30- 9-32□□	IP54	298	93	317	365.6	231	68	298
NEW EXWF30- 9-40□□	IP54	298	93	397	445.6	231	68	378
NEW EXWF30-14-25□□	IP54	298	143	247	295.6	231	118	228
NEW EXWF30-14-32□□	IP54	298	143	317	365.6	231	118	298
NEW EXWF30-14-40□□	IP54	298	143	397	445.6	231	118	378

How to install cover gaskets

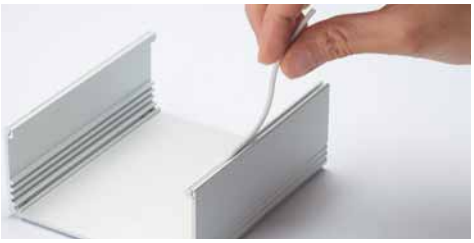

■ Insert cover gasket into the joint-grooves on the bottom cover.

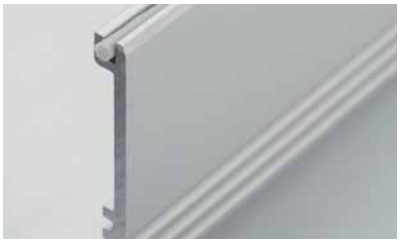

■ Ensure that a small portion of the cover gasket protrudes out in order to maintain a connection with the end panel.

EX series EXTRUDED ALUMINIUM CASE

NEW SIZE

- Simple yet beautifully designed aluminium extrusion enclosure.
- Selectable in 4 different color combinations and 73 different sizes.
- High-end finish is achieved by precision CNC of the end panels.
- Suitable for industrial and audio interface equipment.
- Custom length is available.

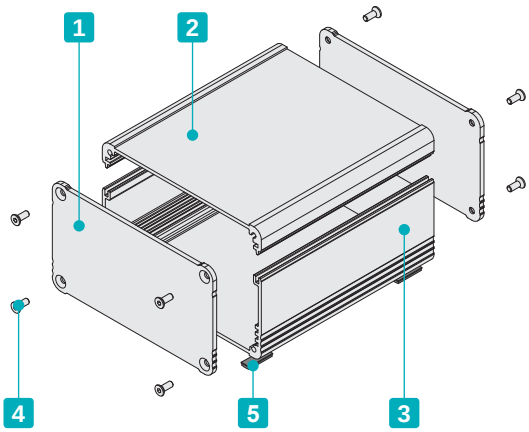

Components

No.	Part name	Pcs	Material	Color / Finish
1	Panel	2	Aluminium A1050P	Silver • Black / Anodized
2	Top cover	1	Extruded aluminium A6063S-T5	Silver • Black / Anodized with clear coating
3	Bottom cover	1	Extruded aluminium A6063S-T5	Silver • Black / Anodized with clear coating
4	Screw (Hexagonal)	8	Stainless steel	Unfinished
5	Rubber feet	4	Polyurethane • Synthetic rubber	Black

- See page 217 ~ 220 for Top / Bottom cover dimensions
- Rubber feet material : Polyurethane : EX6-□ ~ 19-□ models • Synthetic rubber : EX23-□ ~ 29-□ models.

Color Type

Code	S S Silver / Silver	S B Silver / Black	B S Black / Silver	B B Black / Black
Color				

EX dimensions

※c = Top / Bottom cover length.

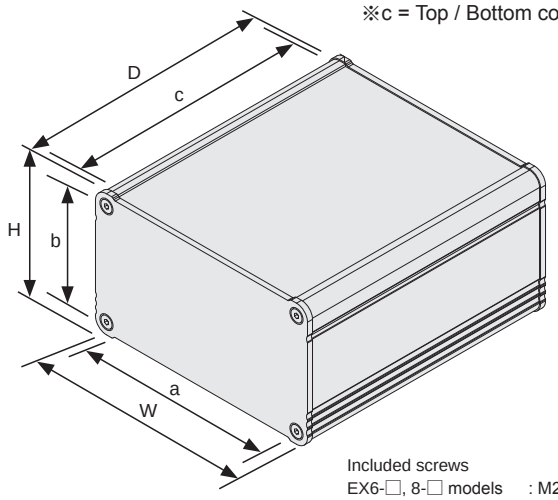

Included screws
EX6-□, 8-□ models : M2.5-8 x 8 pcs
EX11-□, 14-□ models : M3-8 x 8 pcs
EX19-□ models : M4-10 x 8 pcs
EX23-□, 29-□ models : M5-10 x 8 pcs
※Hexagonal wrench included.

■ DXF/DWG/PDF/STP drawings available on our website.

Accessories (Optional parts)

Wall mounting bracket EF series
See page 254

Product no. / Dimensions

■ Please suffix color code at the end of the product number.

Product no.	External dimensions			Internal dimensions		
	W	H	D	a	b	c
EX 6- 3- 5□□	60.6	25.6	50	46	19.6	46
EX 6- 3- 8□□	60.6	25.6	77	46	19.6	73
EX 6- 3-10□□	60.6	25.6	100	46	19.6	96
EX 6- 4- 5□□	60.6	35.6	50	46	29.6	46
EX 6- 4- 8□□	60.6	35.6	77	46	29.6	73
EX 6- 4-10□□	60.6	35.6	100	46	29.6	96
EX 6- 5- 5□□	60.6	50.6	50	46	44.6	46
EX 6- 5- 8□□	60.6	50.6	77	46	44.6	73
EX 6- 5-10□□	60.6	50.6	100	46	44.6	96
EX 8- 3- 6□□	80.6	30.6	60	66	24.6	56
EX 8- 3- 9□□	80.6	30.6	90	66	24.6	86
EX 8- 3-12□□	80.6	30.6	120	66	24.6	116
EX 8- 4- 6□□	80.6	40.6	60	66	34.6	56
EX 8- 4- 9□□	80.6	40.6	90	66	34.6	86
EX 8- 4-12□□	80.6	40.6	120	66	34.6	116
EX 8- 6- 6□□	80.6	55.6	60	66	49.6	56
EX 8- 6- 9□□	80.6	55.6	90	66	49.6	86
EX 8- 6-12□□	80.6	55.6	120	66	49.6	116
EX11- 3- 8□□	106	31	79	88	24	74
EX11- 3-12□□	106	31	119	88	24	114
EX11- 3-16□□	106	31	165	88	24	160
EX11- 5- 8□□	106	46	79	88	39	74
EX11- 5-12□□	106	46	119	88	39	114
EX11- 5-16□□	106	46	165	88	39	160
EX11- 6- 8□□	106	61	79	88	54	74
EX11- 6-12□□	106	61	119	88	54	114
EX11- 6-16□□	106	61	165	88	54	160
EX14- 4-10□□	141	36	98	106.8	29	93
EX14- 4-14□□	141	36	138	106.8	29	133
EX14- 4-19□□	141	36	188	106.8	29	183
EX14- 5-10□□	141	51	98	106.8	44	93
EX14- 5-14□□	141	51	138	106.8	44	133
EX14- 5-19□□	141	51	188	106.8	44	183
EX14- 7-10□□	141	71	98	106.8	64	93
EX14- 7-14□□	141	71	138	106.8	64	133
EX14- 7-19□□	141	71	188	106.8	64	183
EX14- 9-10□□	141	91	98	106.8	84	93
EX14- 9-14□□	141	91	138	106.8	84	133
EX14- 9-19□□	141	91	188	106.8	84	183

■ Custom length is available

Product no.	External dimensions			Internal dimensions		
	W	H	D	a	b	c
EX19- 4-13□□	186.5	43.5	125	131	35	120
EX19- 4-18□□	186.5	43.5	177	131	35	172
EX19- 4-23□□	186.5	43.5	230	131	35	225
EX19- 4-29□□	186.5	43.5	285	131	35	280
EX19- 6-13□□	186.5	61.5	125	131	53	120
EX19- 6-18□□	186.5	61.5	177	131	53	172
EX19- 6-23□□	186.5	61.5	230	131	53	225
EX19- 6-29□□	186.5	61.5	285	131	53	280
EX19- 8-13□□	186.5	81.5	125	131	73	120
EX19- 8-18□□	186.5	81.5	177	131	73	172
EX19- 8-23□□	186.5	81.5	230	131	73	225
EX19- 8-29□□	186.5	81.5	285	131	73	280
EX19-11-13□□	186.5	106.5	125	131	98	120
EX19-11-18□□	186.5	106.5	177	131	98	172
EX19-11-23□□	186.5	106.5	230	131	98	225
EX19-11-29□□	186.5	106.5	285	131	98	280
EX23- 5-15□□	232	52	153	176	43	147
EX23- 5-21□□	232	52	213	176	43	207
EX23- 5-27□□	232	52	273	176	43	267
EX23- 5-33□□	232	52	333	176	43	327
EX23- 8-15□□	232	77	153	176	68	147
EX23- 8-21□□	232	77	213	176	68	207
EX23- 8-27□□	232	77	273	176	68	267
EX23- 8-33□□	232	77	333	176	68	327
EX23-10-15□□	232	102	153	176	93	147
EX23-10-21□□	232	102	213	176	93	207
EX23-10-27□□	232	102	273	176	93	267
EX23-10-33□□	232	102	333	176	93	327
NEW EX29- 8-23□□	287.5	77.5	234	230	68	228
NEW EX29- 8-30□□	287.5	77.5	304	230	68	298
NEW EX29- 8-38□□	287.5	77.5	384	230	68	378
NEW EX29-13-23□□	287.5	127.5	234	230	118	228
NEW EX29-13-30□□	287.5	127.5	304	230	118	298
NEW EX29-13-38□□	287.5	127.5	384	230	118	378

Cross-section view of top & bottom covers

■ DXF/DWG/PDF/STP drawings available on our website.

EXP • EXPE • EXW • EXPF • EXEF • EXWF7-3-□
EX6-3-□

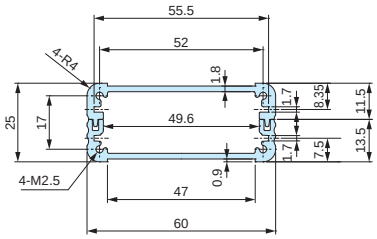

EXP • EXPE • EXW • EXPF • EXEF • EXWF7-4-□
EX6-4-□

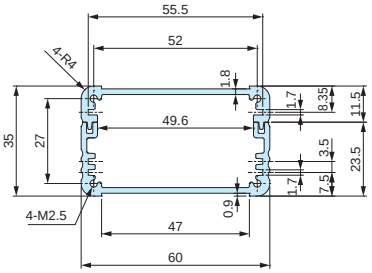

EXP • EXPE • EXW • EXPF • EXEF • EXWF7-6-□
EX6-5-□

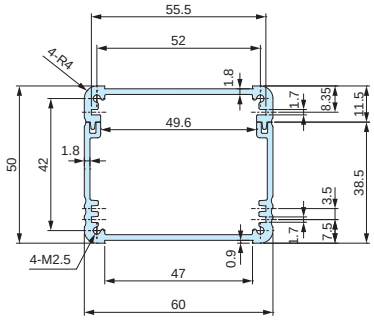

EXP • EXPE • EXW • EXPF • EXEF • EXWF9-4-□
EX8-3-□

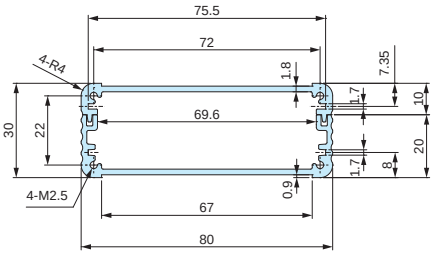

EXP • EXPE • EXW • EXPF • EXEF • EXWF9-5-□
EX8-4-□

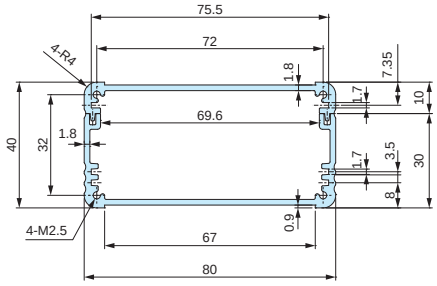

EXP • EXPE • EXW • EXPF • EXEF • EXWF9-6-□
EX8-6-□

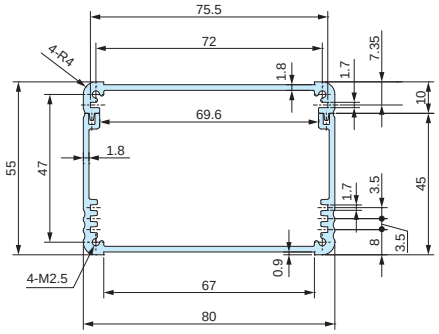

EXP • EXPE • EXW12-4-□
EXPF • EXEF • EXWF11-4-□
EX11-3-□

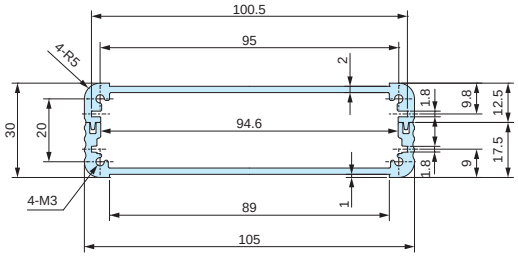

EXP • EXPE • EXW12-6-□
EXPF • EXEF • EXWF11-6-□
EX11-5-□

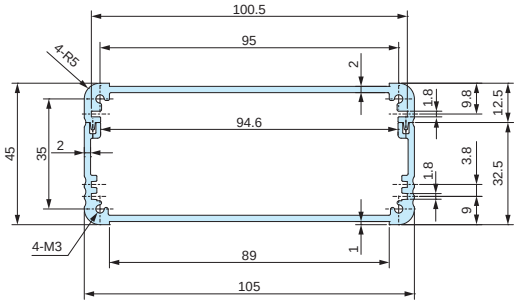

EXP • EXPE • EXW12-7-□
EXPF • EXEF • EXWF11-7-□
EX11-6-□

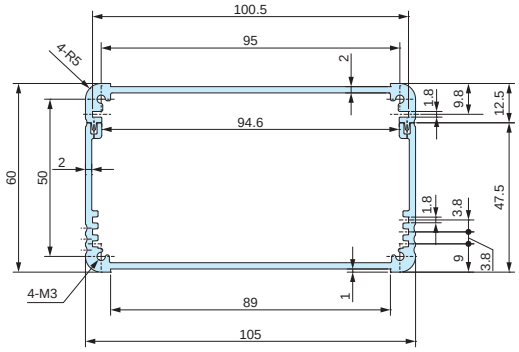

EXP • EXPE • EXW • EXPF • EXEF • EXWF15-5-□
EX14-4-□

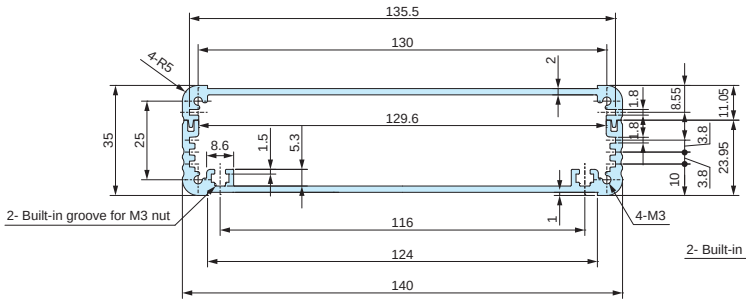

EXP • EXPE • EXW • EXPF • EXEF • EXWF15-6-□
EX14-5-□

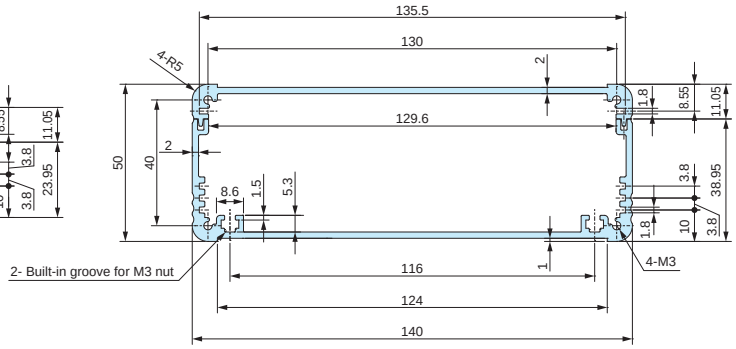

EXP • EXPE • EXW • EXPF • EXEF • EXWF15-8-□
EX14-7-□

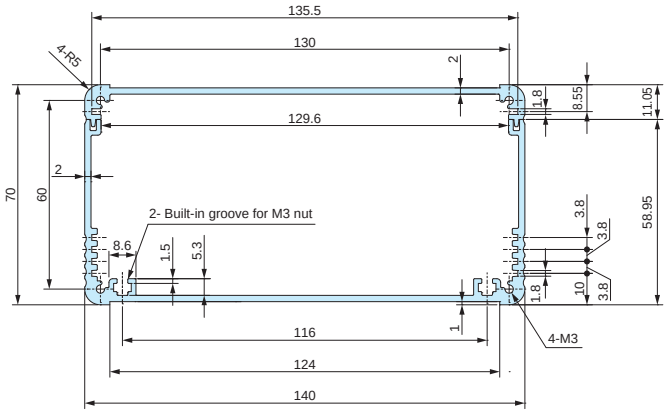

EXP • EXPE • EXW • EXPF • EXEF • EXWF15-10-□
EX14-9-□

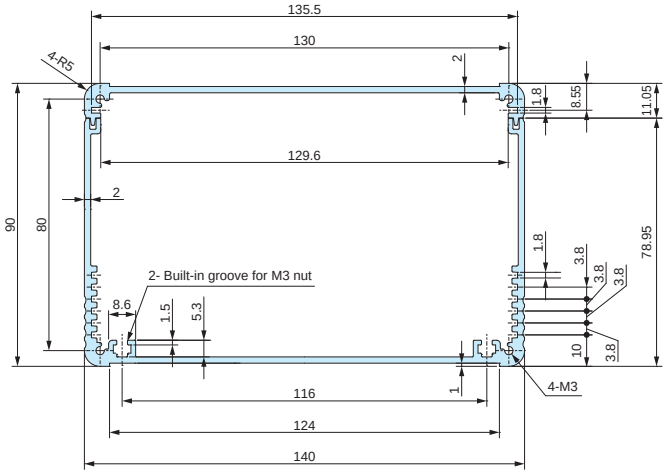

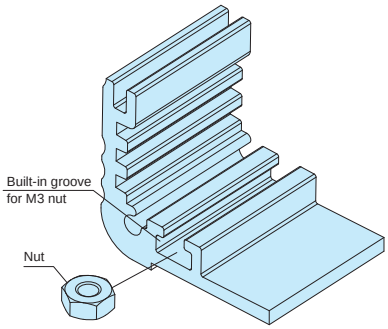

■ Optional sliding nut is available to be used for width 140mm or larger bottom covers.
See page 221 for further details.

Cross-section view of top & bottom covers

■ DXF/DWG/PDF/STP drawings available on our website.

EXPT • EXP • EXPE • EXPF • EXEF • EXWF20-6-□
EX19-4-□

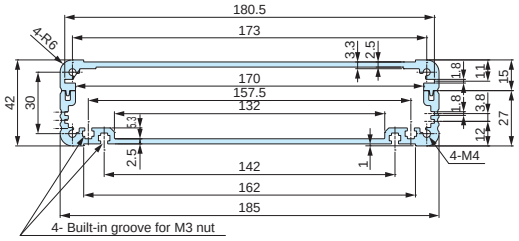

EXPT • EXP • EXPE20-7-□
EXPF • EXEF • EXWF20-8-□
EX19-6-□

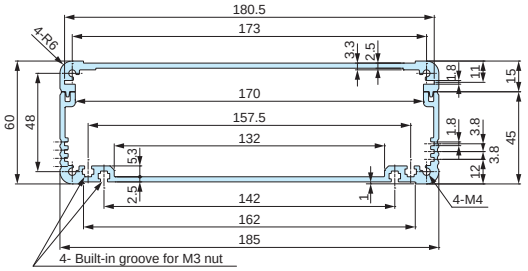

EXPT • EXP • EXPE20-9-□
EXPF • EXEF • EXWF20-10-□
EX19-8-□

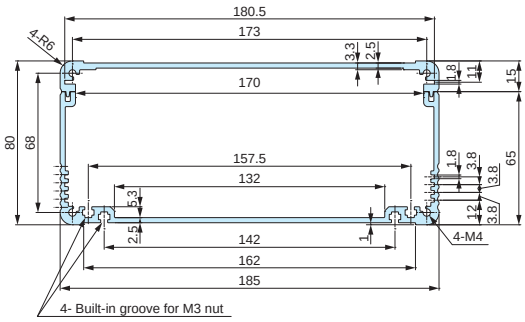

EXPT • EXP • EXPE • EXPF • EXEF • EXWF20-12-□
EX19-11-□

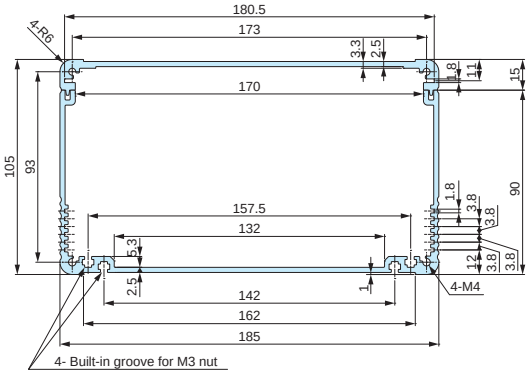

EXPT • EXP • EXPE24-6-□
EXPF • EXEF • EXWF24-7-□
EX23-5-□

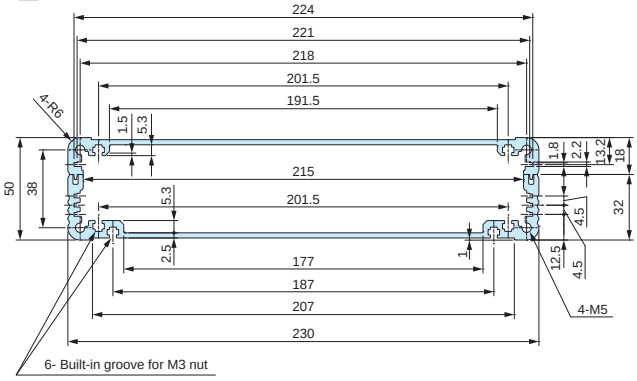

EXPT • EXP • EXPE • EXPF • EXEF • EXWF24-9-□
EX23-8-□

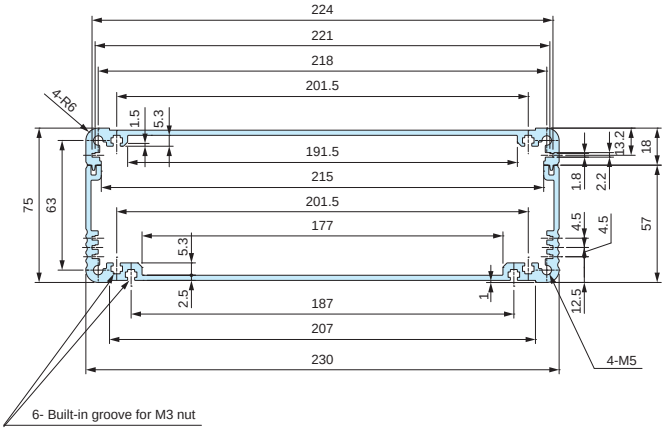

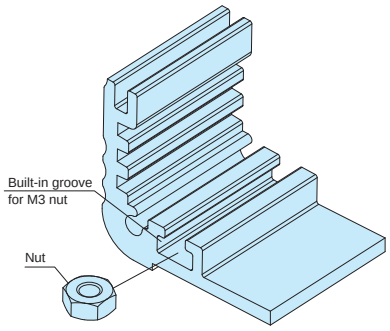

■ Optional sliding nut is available to be used for width 140mm or larger bottom covers.

See page 221 for further details.

EXPT • EXP • EXPE24-11-□
EXPF • EXEF • EXWF24-12-□
EX23-10-□

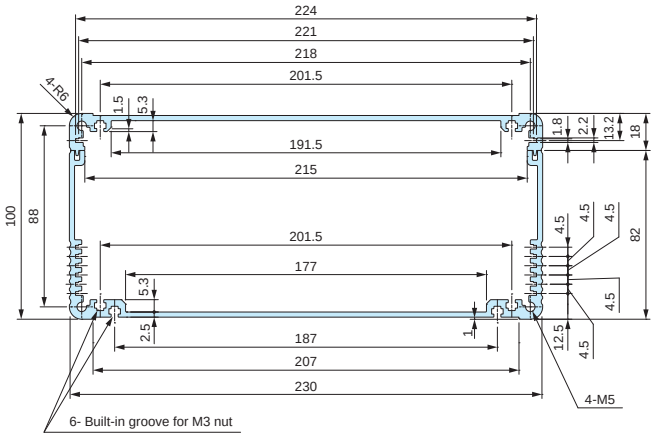

EXPT • EXP • EXPE • EXPF • EXEF • EXWF30-9-□
EX29-8-□

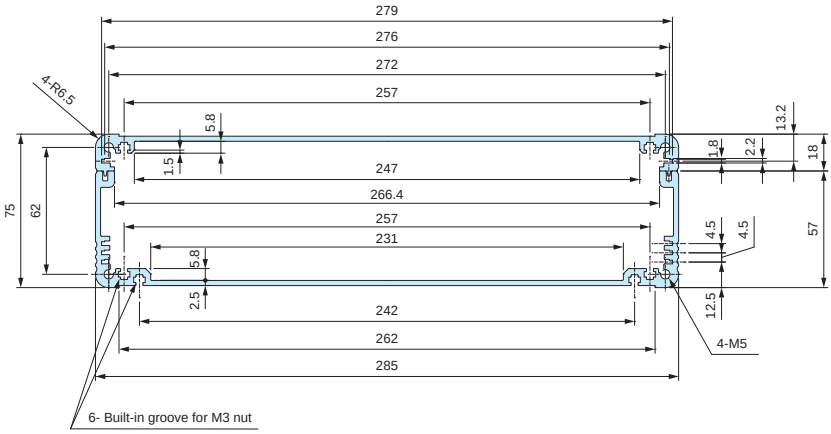

EXPT • EXP • EXPE • EXPF • EXEF • EXWF30-14-□
EX29-13-□

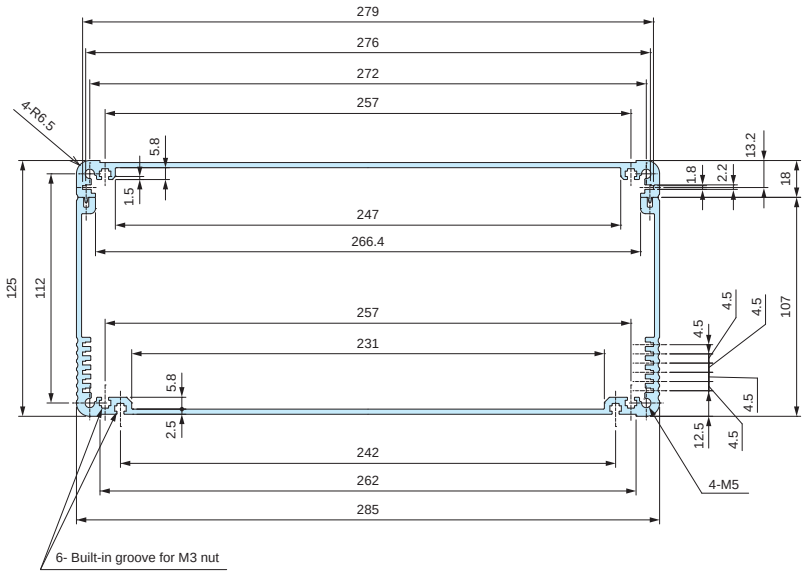

MT-3N SLIDING NUT for EX□ • EXH□

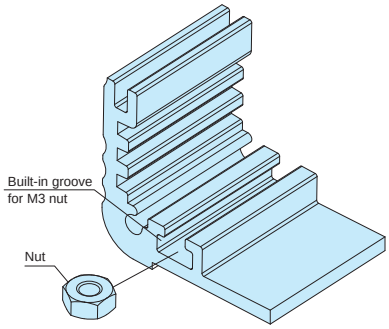

MT-3N dimensions

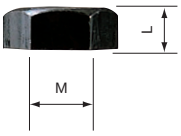

Product no. / Dimensions

Product no.	M	L	Material	Finish	Pack of
MT-3N	3	2.4	Steel	Black trivalent chromate	50

■ Sliding nut can be used on all EXPT • EXP • EXPE • EXW • EXPF • EXEF • EXWF • EX models with width 140mm or larger bottom covers, as well as with width 230mm and 285mm top covers, on all EXH • EXHE • EXHF • EXHFE models with width 140mm or larger bottom covers, as well as all heat-sink top covers.

EXEG series EMC SHIELDING FABRIC-OVER-FOAM GASKET

■ Exclusive EMC shielding fabric-over-foam gasket for EXPE • EXEF • EXHE • EXHFE models.

Suitable Models

Product no.	Suitable models
EXEG-2.5	EXPE7-□, 9-□, 12-□, 15-□, EXEF7-□, 9-□, 11-□, 15-□ EXHE8-□, 11-□, 14-□, EXHFE8-□, 11-□, 14-□
EXEG-3.2	EXPE20-□, 24-□, 30-□, EXEF20-□, 24-□ EXHE19-□, 23-□, 29-□, EXHFE19-□, 23-□, 29-□

Product no. / Dimensions

Product no.	Dimensions	Pack of
EXEG-2.5	Φ2.5×500mm	1
EXEG-3.2	Φ3.2×500mm	1

Length tolerance = +/- 10%

EMC Shielding Effects

■ Material / Color : Conductive fiber • TPE / Metallic gray

EX series APPLICATION EXAMPLE

Tube Amplifier

Product by MJ Audio Technology

IoT Relay Module

Product by Bunnyhop (Japan)

Premain Power Amplifier

Product by AY-densi (Japan)

USB Edge Node

Product by SHINWA (Japan)

TLW series TILT LEG

APPLICATION EXAMPLE

- Double shot injection molded feet with soft and well-designed rounded shape.
- Non-slip design with Elastomer (TPE) pad.
- Available in 3 different color patterns (2 color patterns for TLW-70 models).
- TLW-70E models are exclusively for use with width 185mm or larger bottom covers of EXP • EXPE • EXW • EX • EXH • EXHE aluminium enclosures.

Technical Data
Max load : 7kg

Components

No.	Part name	Pcs	Material	Color / Finish
1	Front foot	2	PC + ABS UL94V-0 • TPE	Black & Black • Navy & Gray • Light gray & Gray
2	Rear foot	2	PC + ABS UL94V-0 • TPE	Black & Black • Navy & Gray • Light gray & Gray
–	Screw	4	Steel M3-8 pan head	Black trivalent chromate
–	Nut	4	Steel M3	Black trivalent chromate

TLW dimensions

- DXF/DWG/PDF/STP drawings available on our website.

Mounting hole (Front)

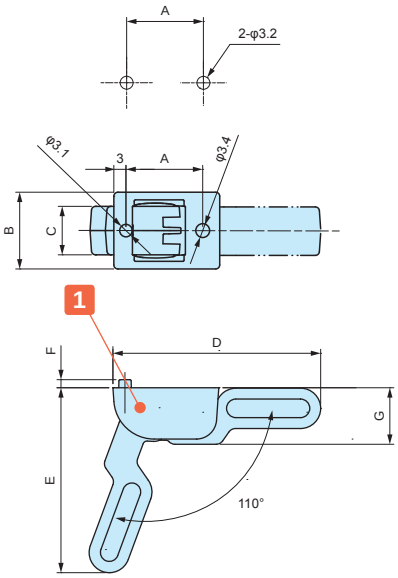

Mounting hole (Rear)

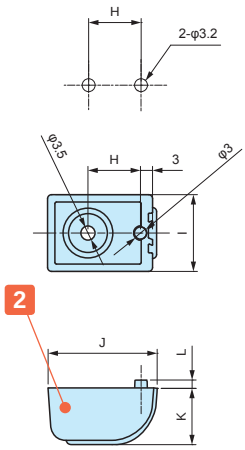

- TLW-70E□□ models are for installation (with M3 nut) into the built-in grooves on bottom-covers of EXP • EXPE 20-6, EXH • EXHE • EX 19-4 or larger models.
- Hole milling is required to install TLW-46□□ and TLW-70□□ models.
- Max installation panel thickness : t = 3.5mm

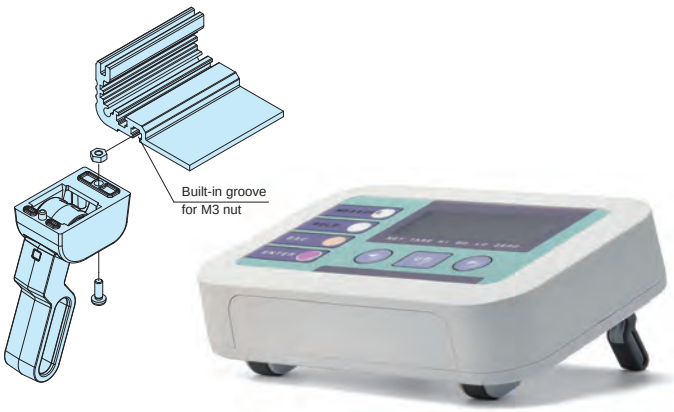

Product no. / Dimensions

Product no.	A	B	C	D	E	F	G	H	I	J	K	L	Color (plastic)	Color (TPE)	Weight (g)
TLW-46BB	19	19	12	51.2	45.9	2	14	13	19	27	14	2	Black	Black	23
TLW46-NG	19	19	12	51.2	45.9	2	14	13	19	27	14	2	Navy	Gray	23
TLW-46LG	19	19	12	51.2	45.9	2	14	13	19	27	14	2	Light gray	Gray	23
TLW-70EBB	–	25	16	75.4	69	3	21.5	–	25	39	21.5	3	Black	Black	59
TLW-70ENG	–	25	16	75.4	69	3	21.5	–	25	39	21.5	3	Navy	Gray	59
TLW-70ELG	–	25	16	75.4	69	3	21.5	–	25	39	21.5	3	Light gray	Gray	59
TLW-70BB	30	25	16	75.4	69	2	21.5	20	25	39	21.5	2	Black	Black	59
TLW-70LG	30	25	16	75.4	69	2	21.5	20	25	39	21.5	2	Light gray	Gray	59

AW • AWN • AWP series

IP68 ALUMINIUM ENCLOSURE

AW • AWN • AWP series are highly functional aluminium enclosures which are IP68 (24 hours / 1m depth immersion) rated with heat dissipating heat-sink fins.
34 sizes available. Standard, Flanged, Shielding, and Silicone protector types are available.
Suitable for LED power supply, industrial camera, controller or measuring instrument where waterproof and cooling performance are crucial.

APPLICATION EXAMPLE

Waterproof Boating Network Modular System

Product by Dockmate (Belgium)

GNSS Receiver

Product by KomNavRus

Heavy Duty Portable Hardness Tester

Product by DEMEQ (Argentina)

LoRa Wan Gateway

Product by ProEsys (Italy)

Radio-Control Electronic Exploder

Product by CODETEL (France)

Pin Hole Detector

Product by SANKO ECECTRONIC LABORATORY (Japan)

FBG Data Logger

Product by NAGANO KEIKI (Japan)

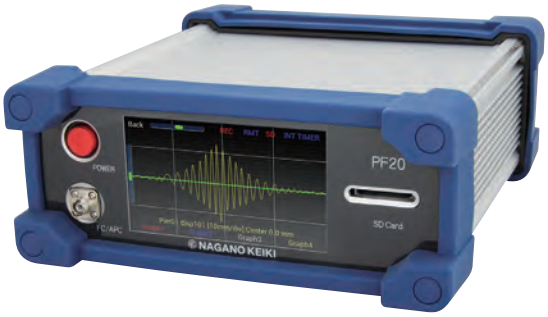

Data Logger with 3G Modem Report Function

Product by mSolution (Hong Kong)

Custom Length Available

Flexible frame length from 50mm to 700mm in 1mm intervals.

No minimum order quantity and short lead time for small quantity order.

See our website for further details.

AW series IP68 FLANGED ALUMINIUM ENCLOSURE

EMC Shielding Effects

IP68

- IP68 and heat dissipation enclosure. Designed with flanged end panels.
- PCB or chassis is mounted by sliding it horizontally into an inner-grooved body frame.
- Designed for a tough environment where waterproof and heat countermeasures are required.
- Suitable for outdoor use such as LED power supply and junction boxes.

Technical Data

Protection class: IP68 (24 hours/1m depth)
Operating temperature: -40°C ~ +105°C
Recommended torque: 1.0N • m

Normal N type Components

No.	Part name	Pcs	Material	Color / Finish
1	Flanged end panel	2	Diecast aluminium ADC12	Metallic gray • Black / Powder coated
2	Body frame	1	Extruded aluminium A6063S-T5	Silver • Black / Anodized with clear coating
3	Gasket	2	Silicone	Black
4	Screw	8	Stainless steel	Unfinished

EMC Shielded E type Components

No.	Part name	Pcs	Material	Color / Finish
1	Flanged end panel	2	Diecast aluminium ADC12	Silver • Black / Painted (Unfinished inside)
2	Body frame	1	Extruded aluminium A6063S-T5	Silver • Black / Anodized with clear coating
3	Gasket	2	Conductive silicone	Black
4	Screw	8	Stainless steel	Unfinished

Normal - N type

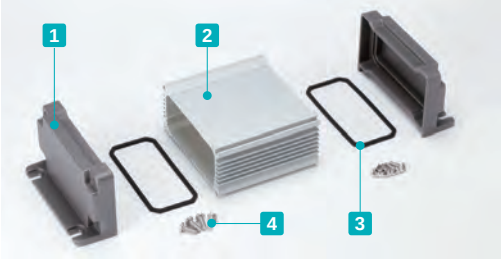

Color type

Metallic gray / Silver

N G S

Black / Silver

N B S

Black / Black

N B B

EMC Shielded - E type

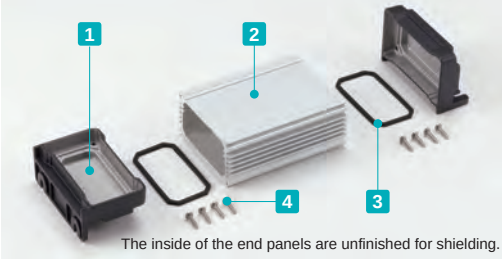

The inside of the end panels are unfinished for shielding.

Color type

Silver / Silver

E S S

Black / Silver

E B S

Black / Black

E B B

AW dimensions

■ DXF/DWG/PDF/STP drawings available on our website.

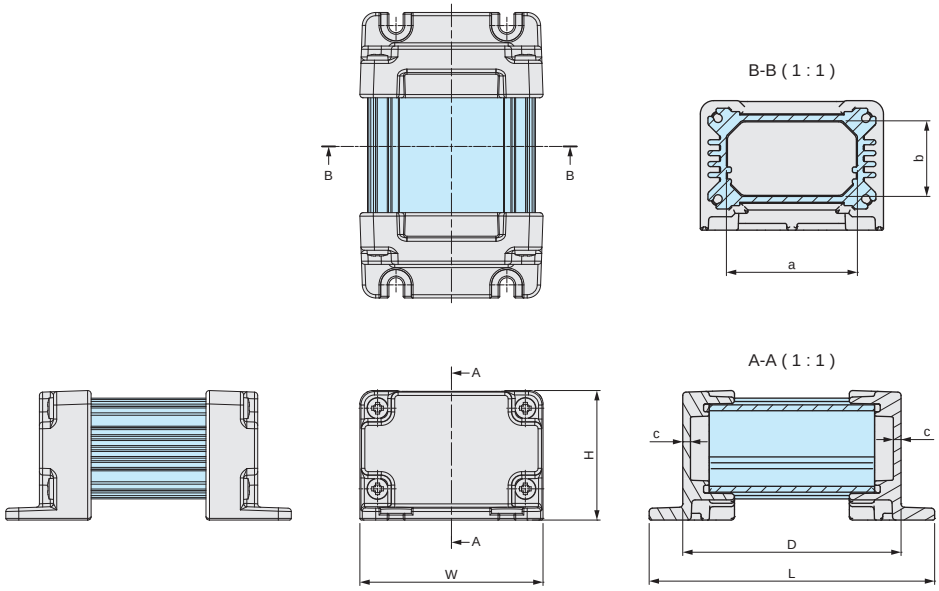

See page 235 and 236 for detailed body frame dimensions.

Product no. / Dimensions

■ Please suffix color code at the end of the product number.

Product no.	W	H	D	L	a	b	c	Weight (g)
AW 5-4- 7□□□	54.6	38.6	65	85	39	22.5	2.3	128.5
AW 5-4- 9□□□	54.6	38.6	85	105	39	22.5	2.3	149
AW 5-4-11□□□	54.6	38.6	110	130	39	22.5	2.3	175
AW 5-4-14□□□	54.6	38.6	135	155	39	22.5	2.3	201.5
AW 7-7- 8□□□	65.8	70.8	80	106	47	51	2.5	294.5
AW 7-7-11□□□	65.8	70.8	110	136	47	51	2.5	350
AW 7-7-15□□□	65.8	70.8	150	176	47	51	2.5	424.5
AW 7-7-20□□□	65.8	70.8	200	226	47	51	2.5	517
AW 7-7-25□□□	65.8	70.8	250	276	47	51	2.5	610
AW 8-5- 9□□□	80.8	50.8	90	116	62	31	2.5	289.5
AW 8-5-12□□□	80.8	50.8	115	141	62	31	2.5	330.5
AW 8-5-14□□□	80.8	50.8	140	166	62	31	2.5	372
AW 8-5-18□□□	80.8	50.8	175	201	62	31	2.5	429.5
AW 9-9-10□□□	86.3	92	100	129	66.5	66.5	3	560.5
AW 9-9-13□□□	86.3	92	125	154	66.5	66.5	3	633.5
AW 9-9-17□□□	86.3	92	170	199	66.5	66.5	3	764.5
AW 9-9-22□□□	86.3	92	220	249	66.5	66.5	3	910.5
AW 9-9-28□□□	86.3	92	275	304	66.5	66.5	3	1,071
AW11-6-11□□□	106.3	62	110	139	86.5	36.5	3	526.5
AW11-6-15□□□	106.3	62	150	179	86.5	36.5	3	625
AW11-6-19□□□	106.3	62	190	219	86.5	36.5	3	723.5
AW11-6-24□□□	106.3	62	240	269	86.5	36.5	3	847
AW12-8-11□□□	120	77	105	134	100.2	51.5	3	614.5
AW12-8-14□□□	120	77	140	169	100.2	51.5	3	720.5
AW12-8-17□□□	120	77	179.5	208.5	100.2	51.5	3	840
AW12-8-22□□□	120	77	215	244	100.2	51.5	3	947.5
AW16-9-14□□□	156.3	87	135	164	136.5	61.5	3	945.5
AW16-9-18□□□	156.3	87	175	204	136.5	61.5	3	1,092.5
AW16-9-23□□□	156.3	87	225	254	136.5	61.5	3	1,275.5
AW16-9-28□□□	156.3	87	275	304	136.5	61.5	3	1,459
AW21-9-17□□□	206.3	87	170	199	186.5	61.5	3	1,303
AW21-9-21□□□	206.3	87	210	239	186.5	61.5	3	1,473.5
AW21-9-26□□□	206.3	87	260	289	186.5	61.5	3	1,686.5
AW21-9-31□□□	206.3	87	310	339	186.5	61.5	3	1,899.5

■ Custom length is available.

Accessories (Optional parts)

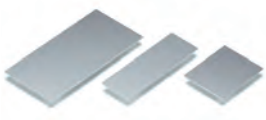

Mounting plate AWC series
See page 238

Hexagon socket head screw HCS series
See page 238

Cable gland
See page 333 ~ 340

Pole mounting bracket SSK series
See website

Protective vent PMF series
See page 325 ~ 326

AWN series IP68 HEAT-SINK ALUMINIUM ENCLOSURE

EMC Shielding Effects

IP68

- IP68 and heat dissipation enclosure design. Selectable in both Normal or EMC Shielded type.
- The extruded aluminium frame and diecast aluminium panels makes it extremely suitable to be used in harsh environments where waterproofing and heat dissipation is essential.
- PCB or chassis can be mounted by sliding it horizontally into inner-grooved body frame.
- Suitable for measuring instruments, industrial control box, and industrial camera housing, among others.

Technical Data

Protection class: IP68 (24 hours/1m depth)
Operating temperature: -40°C ~ +105°C
Recommended torque: 1.0N • m

Normal N type Components

No.	Part name	Pcs	Material	Color / Finish
1	End panel	2	Diecast aluminium ADC12	Metallic gray • Black / Powder coated
2	Body frame	1	Extruded aluminium A6063S-T5	Silver • Black / Anodized with clear coating
3	Gasket	2	Silicone	Black
4	Screw	8	Stainless steel	Unfinished
5	Rubber feet	4	Polyurethane	Black

EMC Shielded E type Components

No.	Part name	Pcs	Material	Color / Finish
1	End panel	2	Diecast aluminium ADC12	Silver • Black / Painted (Unfinished inside)
2	Body frame	1	Extruded aluminium A6063S-T5	Silver • Black / Anodized with clear coating
3	Gasket	2	Conductive silicone	Black
4	Screw	8	Stainless steel	Unfinished
5	Rubber feet	4	Polyurethane	Black

Normal - N type

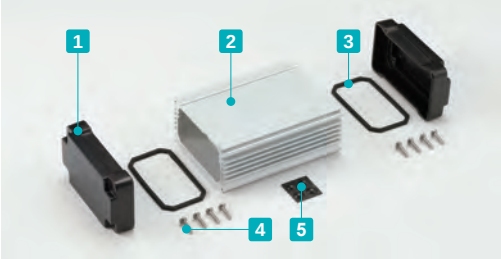

Color type

Metallic gray / Silver

N G S

Black / Silver

N B S

Black / Black

N B B

EMC Shielded - E type

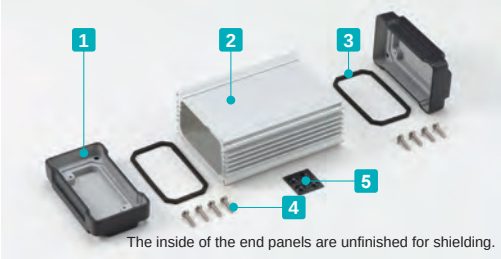

The inside of the end panels are unfinished for shielding.

Color type

Silver / Silver

E S S

Black / Silver

E B S

Black / Black

E B B

AWN dimensions

■ DXF/DWG/PDF/STP drawings available on our website.

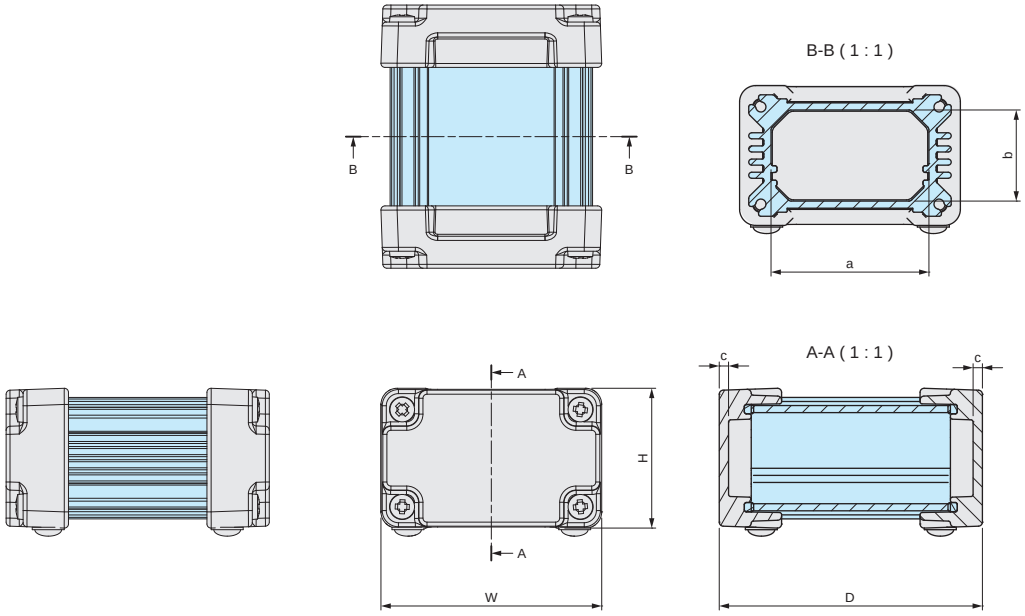

See page 235 and 236 for detailed body frame dimensions.

Product no. / Dimensions

■ Please suffix color code at the end of the product number.

Product no.	W	H	D	a	b	c	Weight (g)
AWN 5-4- 7□□□	54.6	34.6	65	39	22.5	2.3	118.5
AWN 5-4- 9□□□	54.6	34.6	85	39	22.5	2.3	139
AWN 5-4-11□□□	54.6	34.6	110	39	22.5	2.3	165
AWN 5-4-14□□□	54.6	34.6	135	39	22.5	2.3	191.5
AWN 7-7- 8□□□	65.8	65.8	80	47	51	2.5	272.5
AWN 7-7-11□□□	65.8	65.8	110	47	51	2.5	328
AWN 7-7-15□□□	65.8	65.8	150	47	51	2.5	402.5
AWN 7-7-20□□□	65.8	65.8	200	47	51	2.5	495
AWN 7-7-25□□□	65.8	65.8	250	47	51	2.5	588
AWN 8-5- 9□□□	80.8	45.8	90	62	31	2.5	259.5
AWN 8-5-12□□□	80.8	45.8	115	62	31	2.5	300.5
AWN 8-5-14□□□	80.8	45.8	140	62	31	2.5	342
AWN 8-5-18□□□	80.8	45.8	175	62	31	2.5	399.5
AWN 9-9-10□□□	86.3	86.3	100	66.5	66.5	3	521.5
AWN 9-9-13□□□	86.3	86.3	125	66.5	66.5	3	594.5
AWN 9-9-17□□□	86.3	86.3	170	66.5	66.5	3	725.5
AWN 9-9-22□□□	86.3	86.3	220	66.5	66.5	3	871.5
AWN 9-9-28□□□	86.3	86.3	275	66.5	66.5	3	1,032
AWN11-6-11□□□	106.3	56.3	110	86.5	36.5	3	479.5
AWN11-6-15□□□	106.3	56.3	150	86.5	36.5	3	578
AWN11-6-19□□□	106.3	56.3	190	86.5	36.5	3	676.5
AWN11-6-24□□□	106.3	56.3	240	86.5	36.5	3	800
AWN12-8-11□□□	120	71.3	105	100.2	51.5	3	590.5
AWN12-8-14□□□	120	71.3	140	100.2	51.5	3	696.5
AWN12-8-17□□□	120	71.3	179.5	100.2	51.5	3	816
AWN12-8-22□□□	120	71.3	215	100.2	51.5	3	923.5
AWN16-9-14□□□	156.3	81.3	135	136.5	61.5	3	871.5
AWN16-9-18□□□	156.3	81.3	175	136.5	61.5	3	1,018.5
AWN16-9-23□□□	156.3	81.3	225	136.5	61.5	3	1,201.5
AWN16-9-28□□□	156.3	81.3	275	136.5	61.5	3	1,385
AWN21-9-17□□□	206.3	81.3	170	186.5	61.5	3	1,261
AWN21-9-21□□□	206.3	81.3	210	186.5	61.5	3	1,431.5
AWN21-9-26□□□	206.3	81.3	260	186.5	61.5	3	1,644.5
AWN21-9-31□□□	206.3	81.3	310	186.5	61.5	3	1,857.5

■ Custom length is available.

Accessories (Optional parts)

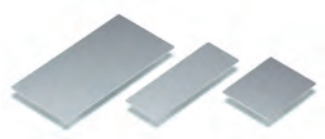

Mounting plate AWC series
See page 238

Hexagon socket head screw HCS series
See page 238

Cable gland
See page 333 ~ 340

Silicone protector AWSP series
See page 237

AWP series IP68 ALUMINIUM ENCLOSURE with SILICONE PROTECTOR

EMC Shielding Effects

IP68

Technical Data
Protection class: IP68 (24 hours/1m depth) Operating temperature: -40°C ~ +105°C Recommended torque: 1.0N • m

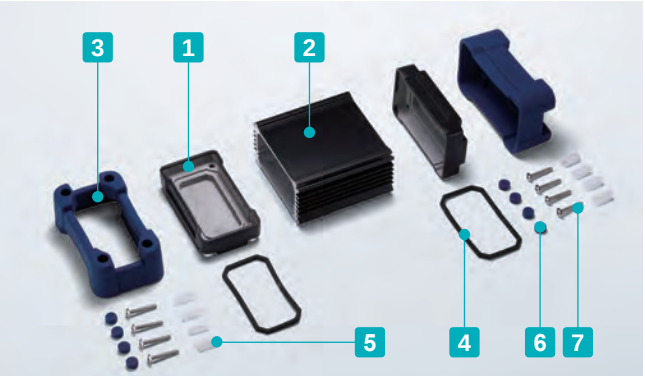

The inside of the end panels are unpainted for shielding.

- Strong impact resistant enclosure with tough silicone boot protectors.
- Specifically designed with heat dissipation effect, EMC shielding and IP68 rating.
- PCB or chassis can be horizontally mounted by sliding into an inner-grooved body frame.
- Available in 25 sizes and 6 different color combinations. Selectable from a total of 150 different combinations.
- Suitable for measuring instruments, industrial control box, industrial camera housing, etc.

Components

No.	Part name	Pcs	Material	Color / Finish
1	End panel	2	Diecast aluminium ADC12	Silver • Black / Painted (Unfinished inside)
2	Body frame	1	Extruded aluminium A6063S-T5	Silver • Black / Anodized with clear coating
3	Protector	2	Silicone	Black • Gray • Navy
4	Conductive gasket	2	Conductive silicone	Black
5	Spacer	8	Resin	White
6	Blind cap	8	Silicone	Black • Gray • Navy
7	Screw	8	Stainless steel	Unfinished

- AWP series utilizes AWN series E type enclosures.
  If N type is required, kindly purchase the enclosure and silicone protector separately.

Color Type

Code	S B Silver / Black	S G Silver / Gray	S N Silver / Navy
Color		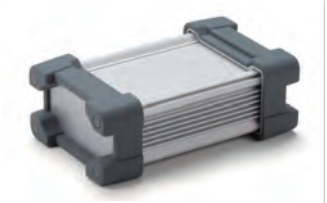	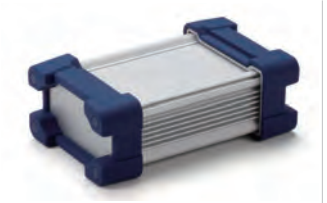
Code	**B B Black / Black**	**B G Black / Gray**	**B N Black / Navy**
Color		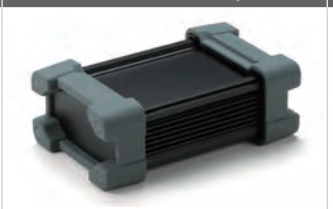	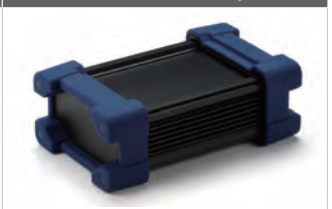

Ordering Number

For example, in case of ordering AWP8-5-9 size, Black enclosure and Navy silicone protector.

Product no. : AWP8-5-9

B **N**

Put a color code SB, SG, SN, BB, BG or BN.

※ Thermal resistance test condition
- Ambient air cooling
- Heat-sink fins are set perpendicular to the ground with temperature at 60°C.
- Anodized aluminium extrusion
- Heat source is applied on the opposite side (inner side) of the fins.

Product no. / Dimensions

See page 235 and 236 for detailed body frame dimensions.

Product no.	W	H	D	※Thermal resistance rate (°C/W)	Weight (g)
AWP 8-5- 9□□	87.4(80.8)	53.6(45.8)	114 (90)	5.97	353.5
AWP 8-5-12□□	87.4(80.8)	53.6(45.8)	139(115)	5.01	394.5
AWP 8-5-14□□	87.4(80.8)	53.6(45.8)	164(140)	4.37	436
AWP 8-5-18□□	87.4(80.8)	53.6(45.8)	199(175)	3.76	493.5
AWP 9-9-10□□	93.9(86.3)	95.1(86.3)	130(100)	3.1	693
AWP 9-9-13□□	93.9(86.3)	95.1(86.3)	155(125)	2.63	766
AWP 9-9-17□□	93.9(86.3)	95.1(86.3)	200(170)	2.12	897
AWP 9-9-22□□	93.9(86.3)	95.1(86.3)	250(220)	1.79	1,043
AWP 9-9-28□□	93.9(86.3)	95.1(86.3)	305(275)	1.54	1,203.5
AWP11-6-11□□	113.9(106.3)	65.1(56.3)	140(110)	4.52	652.5
AWP11-6-15□□	113.9(106.3)	65.1(56.3)	180(150)	3.62	751.5
AWP11-6-19□□	113.9(106.3)	65.1(56.3)	220(190)	3.08	850
AWP11-6-24□□	113.9(106.3)	65.1(56.3)	270(240)	2.64	973
AWP12-8-11□□	127.6(120)	80.1(71.3)	135(105)	3.6	778.5
AWP12-8-14□□	127.6(120)	80.1(71.3)	170(140)	2.93	885
AWP12-8-17□□	127.6(120)	80.1(71.3)	209.5(179.5)	2.47	1,004.5
AWP12-8-22□□	127.6(120)	80.1(71.3)	245(215)	2.18	1,112
AWP16-9-14□□	163.9(156.3)	90.1(81.3)	165(135)	2.64	1,094
AWP16-9-18□□	163.9(156.3)	90.1(81.3)	205(175)	2.2	1,240.5
AWP16-9-23□□	163.9(156.3)	90.1(81.3)	255(225)	1.86	1,424
AWP16-9-28□□	163.9(156.3)	90.1(81.3)	305(275)	1.63	1,607.5
AWP21-9-17□□	213.9(206.3)	90.1(81.3)	202(170)	2.3	1,571.5
AWP21-9-21□□	213.9(206.3)	90.1(81.3)	242(210)	1.99	1,742
AWP21-9-26□□	213.9(206.3)	90.1(81.3)	292(260)	1.72	1,955.5
AWP21-9-31□□	213.9(206.3)	90.1(81.3)	342(310)	1.54	2,168.5

■ Custom length is available.

■ ( ) value = enclosure dimension.

AWP dimensions

■ DXF/DWG/PDF/STP drawings available on our website.

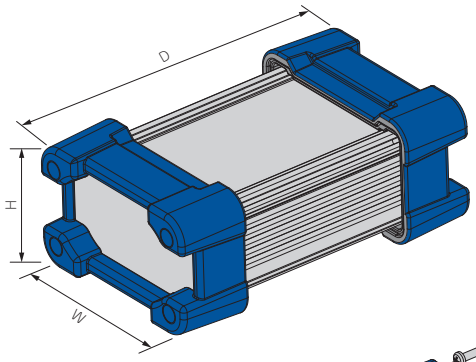

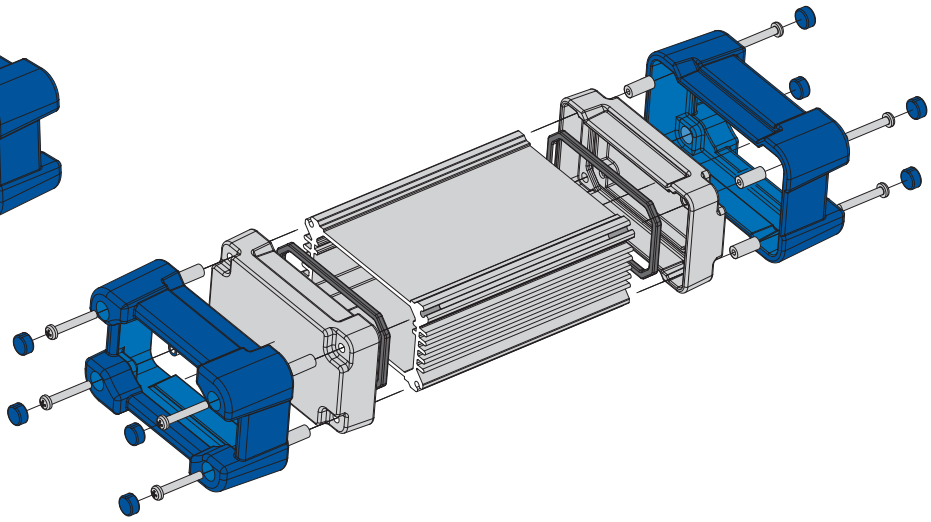

AWA series HEAT-SINK ALUMINIUM ENCLOSURE

AWA series is an aluminium enclosure that has a frame with heat-sink fins on both sides. Furthermore, the enclosure is also conductive, which provides a shielding effect. By machining the panels, the unit becomes extremely suitable to be used as high-end audio, or as an industrial equipment.

APPLICATION EXAMPLE

Industrial IoT Interface Device

Product by SEE Système Radio (France)

Industrial Fanless PC

Audio Amplifier

Wide-Band Solid State Optical Amplifier

Product by Spectra Quest Lab. (Japan)

Customization

CNC milling available for customization on AWA series.
See website for more details.

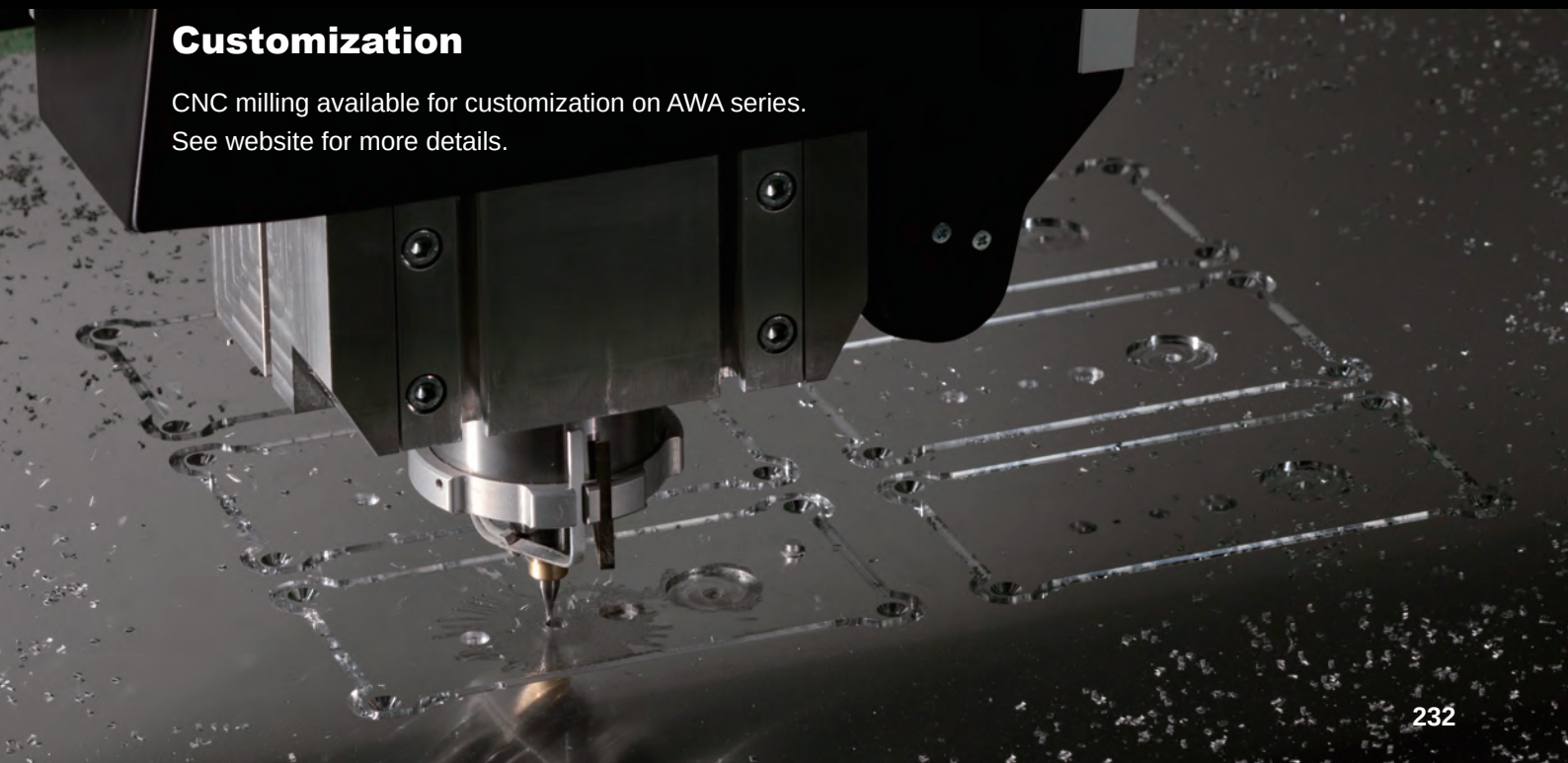

AWA series HEAT-SINK ALUMINIUM ENCLOSURE

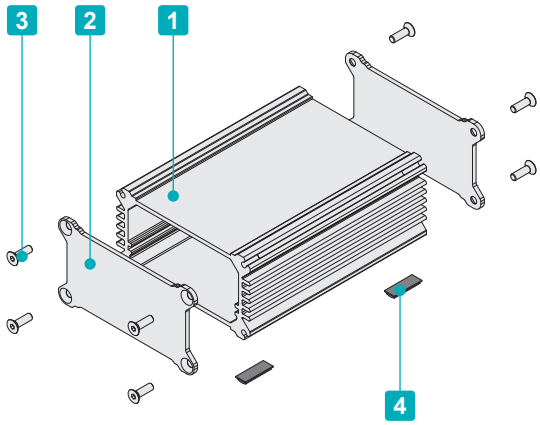

- Extruded aluminium frame manufactured with heat-sink sides.
- Silver anodized end panels makes for a luxurious finish.
- Conductivity is achieved by utilizing the contact between the unfinished end panels side, and the unfinished ends of the frame.
- PCB or chassis can be horizontally mounted by sliding into an inner-grooved body frame.
- Suitable for industrial fanless PC, measuring instrument, digital audio amplifier and so on.
- Custom length is available.

Included screws :
AWA5-3, 6-6, 8-4 models : Hex flat head M3-8 x 8 pcs
AWA8-8, 10-5, 12-7, 15-8 models : Hex flat head M4-10 x 8 pcs
AWA20-8 models : Hex flat head M5-10 x 8 pcs
※Hexagonal wrench included.

Component

No.	Part name	Pcs	Material	Color / Finish
1	Body frame	1	Extruded aluminium A6063S-T5	Silver / Anodized with clear coating
2	End panel	2	Aluminium A1050P	Silver / Anodized (Unfinished inside)
3	Hex socket screw	8	Stainless steel	Unfinished
4	Rubber feet	4	Polyurethane	Black

Accessories (Optional parts)

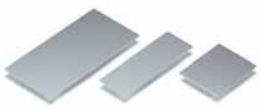

Mounting plate AWC series
See page 238

Aluminium isolation feet AFS • AFM series
See page 293 ~ 294

AWA dimensions

■ DXF/DWG/PDF/STP drawings available on our website.

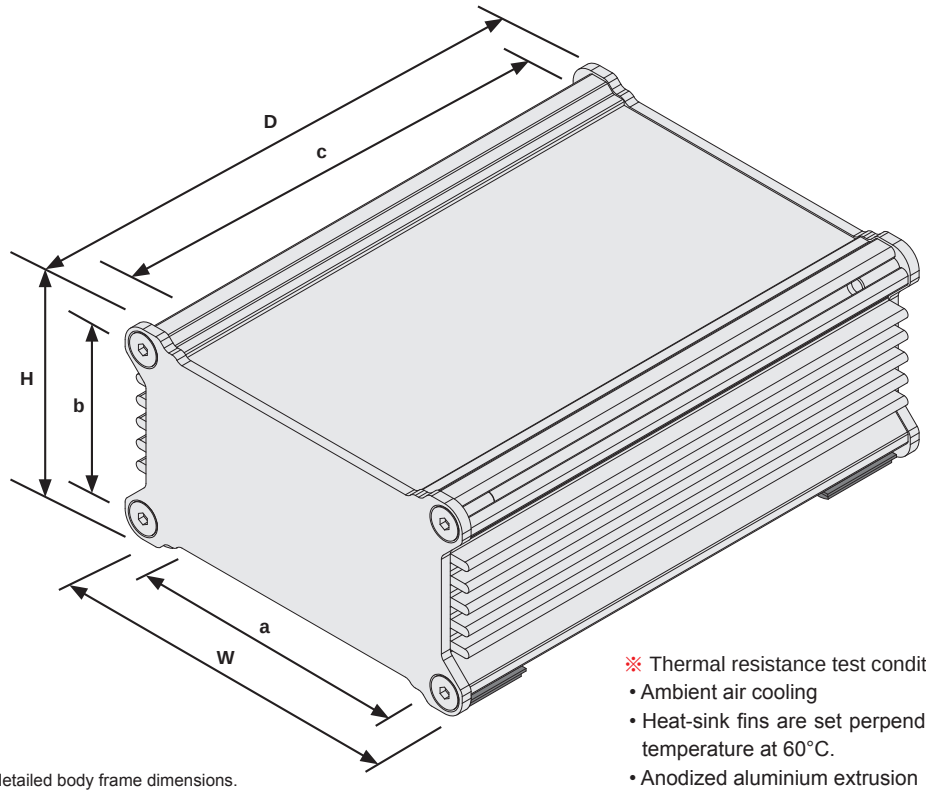

See page 235 and 236 for detailed body frame dimensions.

※ Thermal resistance test condition
- Ambient air cooling
- Heat-sink fins are set perpendicular to the ground with temperature at 60°C.
- Anodized aluminium extrusion
- Heat source is applied on the opposite side (inner side) of the fins.

Product no. / Dimensions

Product no.	External dimensions			Internal dimensions			※Thermal resistance rate (°C/W)	Weight (g)
	W	H	D	a	b	c		
AWA 5-3- 5SS	52	32	53.2	39	22.5	49.2	11.2	69.5
AWA 5-3- 7SS	52	32	73.2	39	22.5	69.2	9.18	90.5
AWA 5-3-10SS	52	32	98.2	39	22.5	94.2	7.64	116.5
AWA 5-3-12SS	52	32	123.2	39	22.5	119.2	6.63	142.5
AWA 6-6- 7SS	61	61	68	47	51	64	4.41	156
AWA 6-6-10SS	61	61	98	47	51	94	3.5	212
AWA 6-6-14SS	61	61	138	47	51	134	2.83	286
AWA 6-6-19SS	61	61	188	47	51	184	2.33	379
AWA 6-6-24SS	61	61	238	47	51	234	2.02	471.5
AWA 8-4- 8SS	76	41	78	62	31	74	5.97	154
AWA 8-4-10SS	76	41	103	62	31	99	5.01	195
AWA 8-4-13SS	76	41	128	62	31	124	4.37	236.5
AWA 8-4-16SS	76	41	163	62	31	159	3.76	294
AWA 8-8- 9SS	82	82	86	66.5	66.5	81	3.1	319.5
AWA 8-8-11SS	82	82	111	66.5	66.5	106	2.63	392.5
AWA 8-8-16SS	82	82	156	66.5	66.5	151	2.12	523.5
AWA 8-8-21SS	82	82	206	66.5	66.5	201	1.79	669.5
AWA 8-8-26SS	82	82	261	66.5	66.5	256	1.54	829.5
AWA10-5-10SS	102	52	95.6	86.5	36.5	90.6	4.52	288.5
AWA10-5-14SS	102	52	135.6	86.5	36.5	130.6	3.62	387.5
AWA10-5-18SS	102	52	175.6	86.5	36.5	170.6	3.08	486
AWA10-5-23SS	102	52	225.6	86.5	36.5	220.6	2.64	609
AWA12-7- 9SS	115.7	67	90.6	100.2	51.5	85.6	3.6	354
AWA12-7-12SS	115.7	67	125.6	100.2	51.5	120.6	2.93	460
AWA12-7-17SS	115.7	67	165.1	100.2	51.5	160.1	2.47	579.5
AWA12-7-20SS	115.7	67	200.6	100.2	51.5	195.6	2.18	687
AWA15-8-12SS	152	77	120.6	136.5	61.5	115.6	2.64	565.5
AWA15-8-16SS	152	77	160.6	136.5	61.5	155.6	2.2	712
AWA15-8-21SS	152	77	210.6	136.5	61.5	205.6	1.86	895.5
AWA15-8-26SS	152	77	260.6	136.5	61.5	255.6	1.63	1,079
AWA20-8-15SS	202.4	77.4	153.8	186.5	61.5	147.8	2.3	854.5
AWA20-8-19SS	202.4	77.4	193.8	186.5	61.5	187.8	1.99	1,025
AWA20-8-24SS	202.4	77.4	243.8	186.5	61.5	237.8	1.72	1,238
AWA20-8-29SS	202.4	77.4	293.8	186.5	61.5	287.8	1.54	1,451.5

Cross-section view of frame

■ DXF/DWG/PDF/STP drawings available on our website.

AW • AWN5-4-□
AWA5-3-□

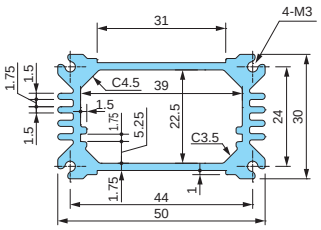

AW • AWN • AWP7-7-□
AWA6-6-□

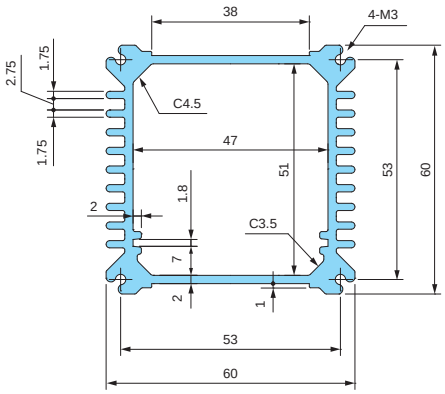

AW • AWN • AWP8-5-□
AWA8-4-□

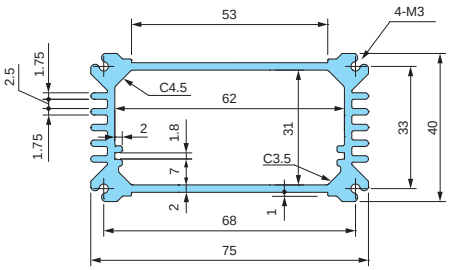

AW • AWN • AWP9-9-□
AWA8-8-□

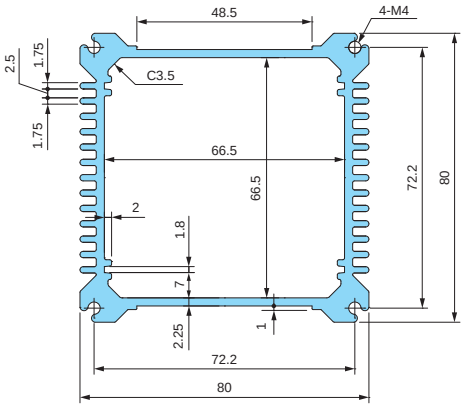

AW • AWN • AWP11-6-□
AWA10-5-□

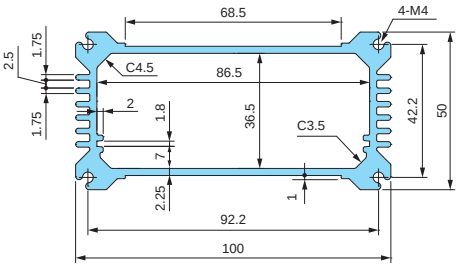

AW • AWN • AWP12-8-□
AWA12-7-□

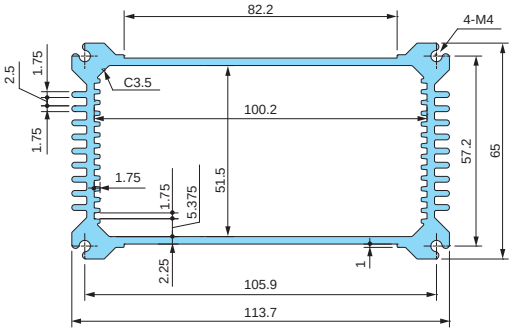

AW • AWN • AWP16-9-□
AWA15-8-□

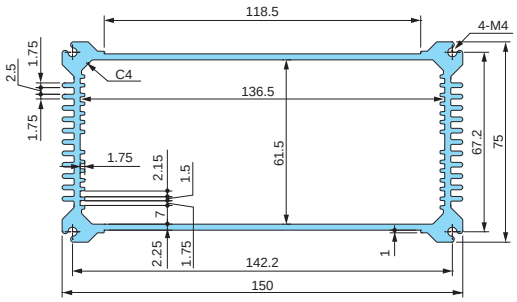

AW • AWN • AWP21-9-□
AWA20-8-□

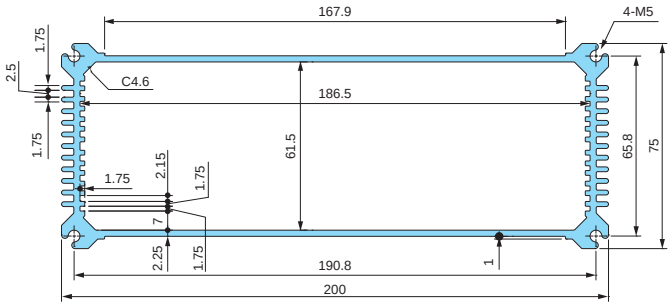

※ Thermal resistance test condition
- Ambient air cooling
- Heat-sink fins are set perpendicular to the ground with temperature at 60°C.
- Anodized aluminium extrusion
- Heat source is applied on the opposite side (inner side) of the fins.

Product no.				Frame length	※Thermal resistance rate (°C/W)
AW 5-4- 7	AWN 5-4- 7	–	AWA 5-3- 5	49.2	11.2
AW 5-4- 9	AWN 5-4- 9	–	AWA 5-3- 7	69.2	9.18
AW 5-4-11	AWN 5-4-11	–	AWA 5-3-10	94.2	7.64
AW 5-4-14	AWN 5-4-14	–	AWA 5-3-12	119.2	6.63
AW 7-7- 8	AWN 7-7- 8	–	AWA 6-6- 7	64	4.41
AW 7-7-11	AWN 7-7-11	–	AWA 6-6-10	94	3.5
AW 7-7-15	AWN 7-7-15	–	AWA 6-6-14	134	2.83
AW 7-7-20	AWN 7-7-20	–	AWA 6-6-19	184	2.33
AW 7-7-25	AWN 7-7-25	–	AWA 6-6-24	234	2.02
AW 8-5- 9	AWN 8-5- 9	AWP 8-5- 9	AWA 8-4- 8	74	5.97
AW 8-5-12	AWN 8-5-12	AWP 8-5-12	AWA 8-4-10	99	5.01
AW 8-5-14	AWN 8-5-14	AWP 8-5-14	AWA 8-4-13	124	4.37
AW 8-5-18	AWN 8-5-18	AWP 8-5-18	AWA 8-4-16	159	3.76
AW 9-9-10	AWN 9-9-10	AWP 9-9-10	AWA 8-8- 9	81	3.1
AW 9-9-13	AWN 9-9-13	AWP 9-9-13	AWA 8-8-11	106	2.63
AW 9-9-17	AWN 9-9-17	AWP 9-9-17	AWA 8-8-16	151	2.12
AW 9-9-22	AWN 9-9-22	AWP 9-9-22	AWA 8-8-21	201	1.79
AW 9-9-28	AWN 9-9-28	AWP 9-9-28	AWA 8-8-26	256	1.54
AW11-6-11	AWN11-6-11	AWP11-6-11	AWA10-5-10	90.6	4.52
AW11-6-15	AWN11-6-15	AWP11-6-15	AWA10-5-14	130.6	3.62
AW11-6-19	AWN11-6-19	AWP11-6-19	AWA10-5-18	170.6	3.08
AW11-6-24	AWN11-6-24	AWP11-6-24	AWA10-5-23	220.6	2.64
AW12-8-11	AWN12-8-11	AWP12-8-11	AWA12-7-9	85.6	3.6
AW12-8-14	AWN12-8-14	AWP12-8-14	AWA12-7-12	120.6	2.93
AW12-8-17	AWN12-8-17	AWP12-8-17	AWA12-7-17	160.1	2.47
AW12-8-22	AWN12-8-22	AWP12-8-22	AWA12-7-20	195.6	2.18
AW16-9-14	AWN16-9-14	AWP16-9-14	AWA15-8-12	115.6	2.64
AW16-9-18	AWN16-9-18	AWP16-9-18	AWA15-8-16	155.6	2.2
AW16-9-23	AWN16-9-23	AWP16-9-23	AWA15-8-21	205.6	1.86
AW16-9-28	AWN16-9-28	AWP16-9-28	AWA15-8-26	255.6	1.63
AW21-9-17	AWN21-9-17	AWP21-9-17	AWA20-8-15	147.8	2.3
AW21-9-21	AWN21-9-21	AWP21-9-21	AWA20-8-19	187.8	1.99
AW21-9-26	AWN21-9-26	AWP21-9-26	AWA20-8-24	237.8	1.72
AW21-9-31	AWN21-9-31	AWP21-9-31	AWA20-8-29	287.8	1.54

AWSP series SILICONE PROTECTOR for AWN

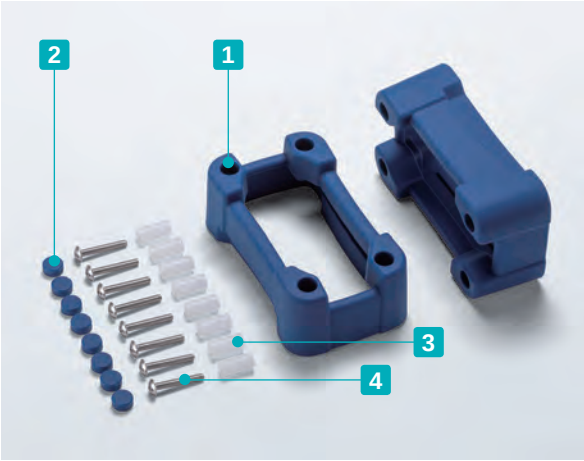

Color Type

Code	B Black	G Gray	N Navy
Color			

- Silicone protector for AWN series.
- Protect switches and/or connectors on end panels from impact when dropped, etc. Custom color is available from just 1 set. For 250 sets or more, manufacture costs will be similar to a standard color. Please inquire for more details. For custom color order, please specify **PANTONE**® color code.

AWSP dimensions

- DXF/DWG/PDF drawings available on our website.

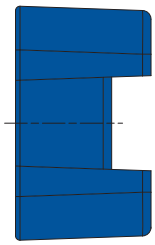

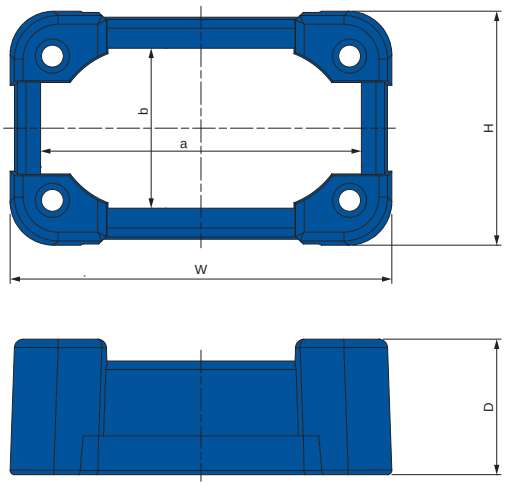

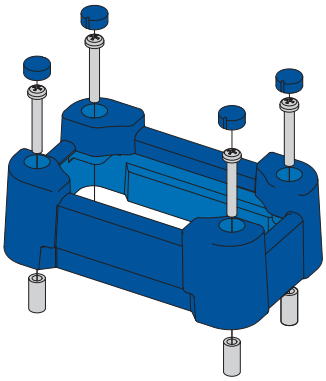

Components

No.	Part name	Pcs	Material	Color / Finish
1	Protector	2	Silicone	Black • Gray • Navy
2	Blind cap	8	Silicone	Black • Gray • Navy
3	Spacer	8	POM	White
4	Screw	8	Stainless steel	Unfinished

Product no. / Dimensions

- Please suffix color code at the end of the product number.

Product no.	W	H	D	a	b	Screw size	Suitable models	Weight (g)
AWSP 8-5□	87.4	53.6	31	73.4	36.6	M3	AWN 8-5-□	100.5
AWSP 9-9□	93.9	95.1	35.5	76.9	75.1	M4	AWN 9-9-□	184.5
AWSP11-6□	113.9	65.1	35.5	96.9	45.1	M4	AWN11-6-□	186
AWSP12-8□	127.6	80.1	35.5	110.6	60.1	M4	AWN12-8-□	201
AWSP16-9□	163.9	90.1	35.5	145.9	69.1	M4	AWN16-9-□	235
AWSP21-9□	213.9	90.1	39.5	192.9	66.1	M5	AWN21-9-□	333

AWC series ALUMINIUM MOUNTING PLATE for AW • AWN • AWP • AWA

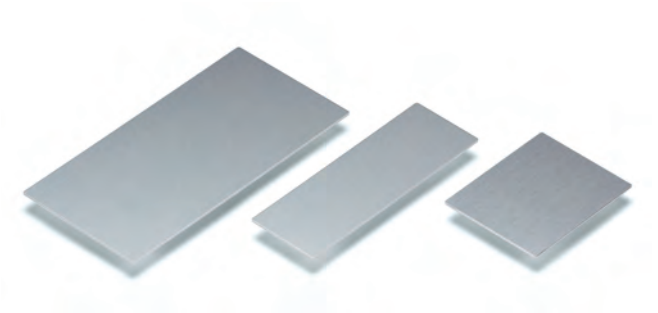

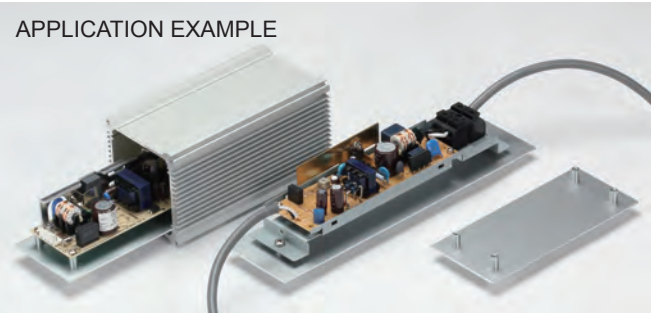

- Material: Aluminium A1050P t=1.5 / Silver anodized
- Mounting plate for AW, AWN, AWP, and AWA enclosures.
- Utilize for mounting PCB, power supply, terminal blocks, etc.

Product no. / Dimensions

Product no.	W	D	Suitable models
AWC 5- 7	38.9	49.2	AW • AWN 5-4- 7 • AWA 5-3- 5
AWC 5- 9	38.9	69.2	AW • AWN 5-4- 9 • AWA 5-3- 7
AWC 5-11	38.9	94.2	AW • AWN 5-4-11 • AWA 5-3-10
AWC 5-14	38.9	119.2	AW • AWN 5-4-14 • AWA 5-3-12
AWC 7- 8	47	64	AW • AWN • AWP 7-7- 8 • AWA 6-6- 7
AWC 7-11	47	94	AW • AWN • AWP 7-7-11 • AWA 6-6-10
AWC 7-15	47	134	AW • AWN • AWP 7-7-15 • AWA 6-6-14
AWC 7-20	47	184	AW • AWN • AWP 7-7-20 • AWA 6-6-19
AWC 7-25	47	234	AW • AWN • AWP 7-7-25 • AWA 6-6-24
AWC 8- 9	61.8	74	AW • AWN • AWP 8-5- 9 • AWA 8-4- 8
AWC 8-12	61.8	99	AW • AWN • AWP 8-5-12 • AWA 8-4-10
AWC 8-14	61.8	124	AW • AWN • AWP 8-5-14 • AWA 8-4-13
AWC 8-18	61.8	159	AW • AWN • AWP 8-5-18 • AWA 8-4-16
AWC 9-10	66.5	81	AW • AWN • AWP 9-9-10 • AWA 8-8- 9
AWC 9-13	66.5	106	AW • AWN • AWP 9-9-13 • AWA 8-8-11
AWC 9-17	66.5	151	AW • AWN • AWP 9-9-17 • AWA 8-8-16
AWC 9-22	66.5	201	AW • AWN • AWP 9-9-22 • AWA 8-8-21
AWC 9-28	66.5	256	AW • AWN • AWP 9-9-28 • AWA 8-8-26
AWC11-11	86.5	90.6	AW • AWN • AWP11-6-11 • AWA10-5-10
AWC11-15	86.5	130.6	AW • AWN • AWP11-6-15 • AWA10-5-14
AWC11-19	86.5	170.6	AW • AWN • AWP11-6-19 • AWA10-5-18
AWC11-24	86.5	220.6	AW • AWN • AWP11-6-24 • AWA10-5-23
AWC12-11	100.2	85.6	AW • AWN • AWP12-8-11 • AWA12-7- 9
AWC12-14	100.2	120.6	AW • AWN • AWP12-8-14 • AWA12-7-12
AWC12-17	100.2	160.1	AW • AWN • AWP12-8-17 • AWA12-7-17
AWC12-22	100.2	195.6	AW • AWN • AWP12-8-22 • AWA12-7-20
AWC16-14	136.3	115.6	AW • AWN • AWP16-9-14 • AWA15-8-12
AWC16-18	136.3	155.6	AW • AWN • AWP16-9-18 • AWA15-8-16
AWC16-23	136.3	205.6	AW • AWN • AWP16-9-23 • AWA15-8-21
AWC16-28	136.3	255.6	AW • AWN • AWP16-9-28 • AWA15-8-26
AWC21-17	186.1	147.8	AW • AWN • AWP21-9-17 • AWA20-8-15
AWC21-21	186.1	187.8	AW • AWN • AWP21-9-21 • AWA20-8-19
AWC21-26	186.1	237.8	AW • AWN • AWP21-9-26 • AWA20-8-24
AWC21-31	186.1	287.8	AW • AWN • AWP21-9-31 • AWA20-8-29

AWC dimensions

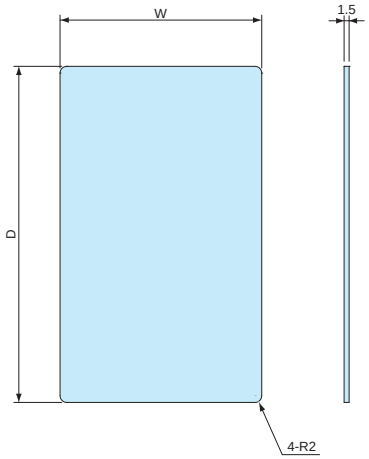

- DXF/DWG/PDF drawings available on our website.

HCS series HEXAGON SOCKET HEAD SCREW for AW • AWN

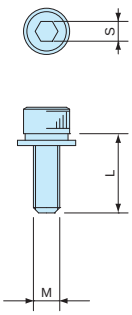

- Hexagon socket head screws for fastening the end panels of AW and AWN enclosures.
- Utilize for tamper-resistance functionality or for an elegant sleek look.

Product no. / Dimensions

Product no.	M	L	S	Material	Pack of
HCS3-12S	3	12	2.5	Stainless steel	8
HCS4-12S	4	12	3	Stainless steel	8
HCS5-12S	5	12	4	Stainless steel	8

TAKACHI
TAKACHI ELECTRONICS ENCLOSURE CO., LTD.
3-21-16 Higashi-ryoke, Kawaguchi-shi, Saitama, 332-0003 JAPAN
Tel. +81-48-222-5409 / Fax. +81-48-222-7652

October 6, 2021

NOTICE

EXH, EXHF and EXHS Series
Discontinuation of Color Types

■ Affected series / models : EXH, EXHF, EXHS series ("BS" and "SB" color types).

BS Color Type (Discontinued)

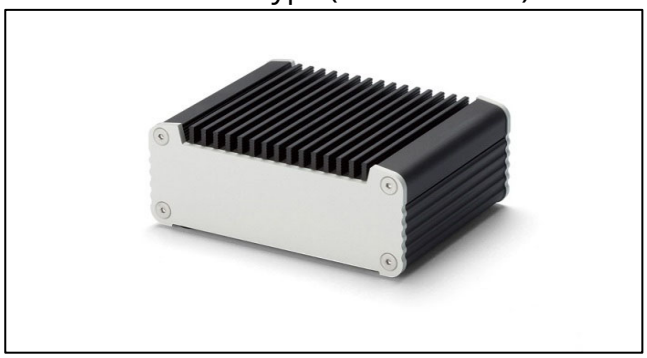

SB Color Type (Discontinued)

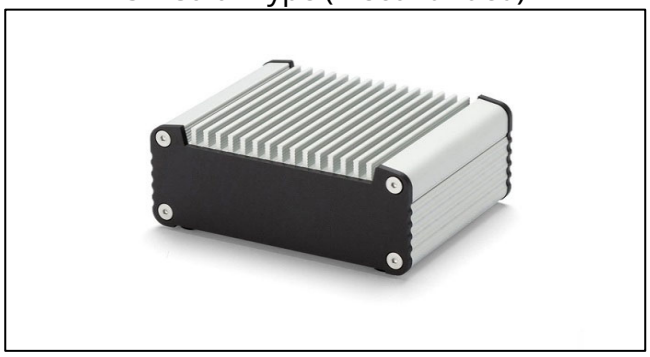

NOTICE

EXH, EXHF, EXHS, EF and EF-36 Series
Changes to Surface Finish

■ Affected series/models : EXH, EXHF, and EXHS series ("SS" color type)
EF, and EF-36 series ("S" color type)

■ Changes : Surface Finish

Current (Old) Design

New Design

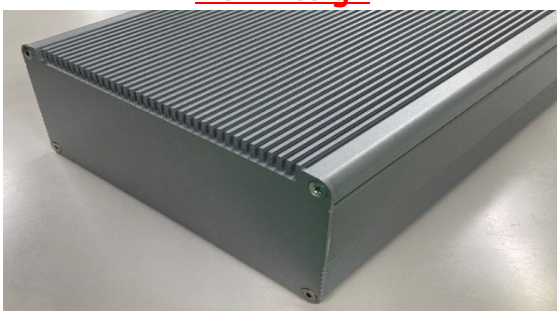

Current (Old) Surface Finish
・Silver Anodized

New Surface Finish
・Silver Metallic Painted (Unfinished Inside)

■ Purpose: To ensure consistent quality throughout via streamlined supply chain and materials.
■ Effective date : From December 9, 2021.
■ Alternatives : "SS" or "BB" color types.

Thank you for your understanding.
For more information, kindly contact us at: sales@takachi-el.co.jp

EXH • EXHE • EXHF • EXHFE series

HEAT-SINK ALUMINIUM ENCLOSURE

EXH • EXHE • EXHF • EXHFE series are aluminium enclosures with a highly efficient heat-sink top cover. Suitable to be used as fanless PC, power amplifier, and power supply box where heat dissipation is required.
Wide range, 64 different sizes available with EMC shielded and flanged models.

Waved surface heat-sink fins for maximum cooling performance!

- Each heat-sink fin has a waved surface construction for maximum cooling performance.

Waved Surface

HEAT DISSIPATION EXAMPLE

- EXH series has grooves to put M3 nuts inside its heat-sink cover.
  It is possible to construct a heat conduction route from your heat source to heat-sink cover easily for better heat dissipation performance.

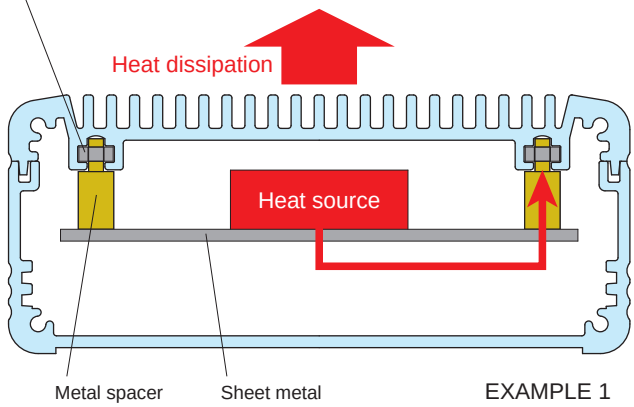

EXAMPLE 1

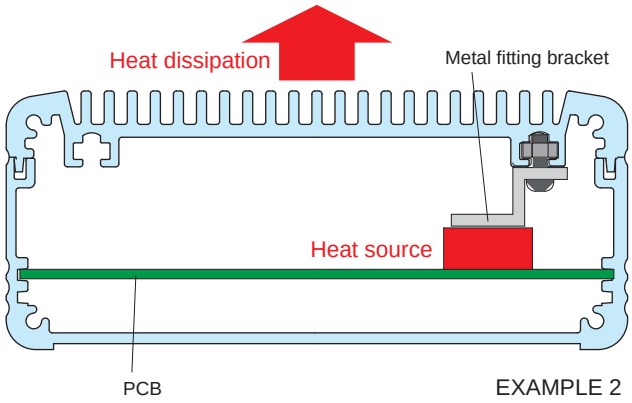

EXAMPLE 2

CUSTOMIZATION EXAMPLE

CNC Machining on Heat-sink Cover

Heat-sink plates can be customized with our high speed CNC machines.

Pin Shaped Fin Customization

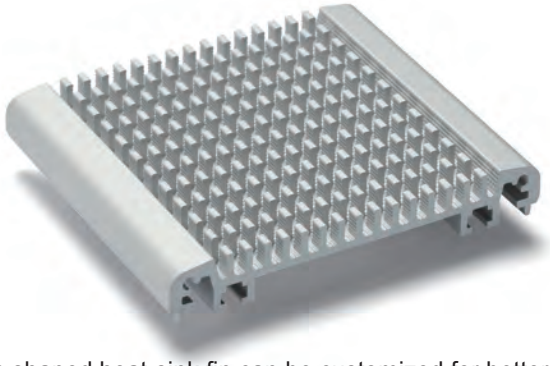

Pin shaped heat-sink fin can be customized for better cooling performance.

Color Anodization

Various colors, such as blue, red, orange, green or purple can be anodized as per your requirements.

■ Not all colors and shades of colors are possible.

Custom Length Available

APPLICATION EXAMPLE

Stabilized Diode Laser

Product by Spectra Quest Lab. (Japan)

Controller

Laser Head

IoT Gateway

Product by VNPT Technology (Vietnam)

UPS Battery Monitoring System

Product by BatteryDAQ (USA)

All-in-one Edge Node

Product by SHINWA (Japan)

4 Channel Power Switching Edge Node

Product by SHINWA (Japan)

Ultra Low Noise Regulation Power Supply

Product by Impex Technology (UAE)

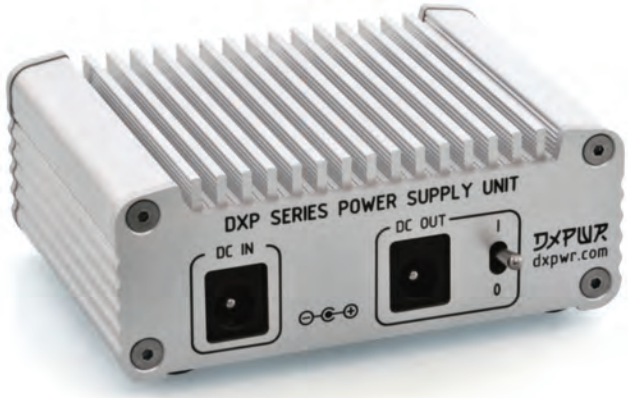

EXH series HEAT-SINK ALUMINIUM ENCLOSURE

NEW SIZE

Heat Resistant

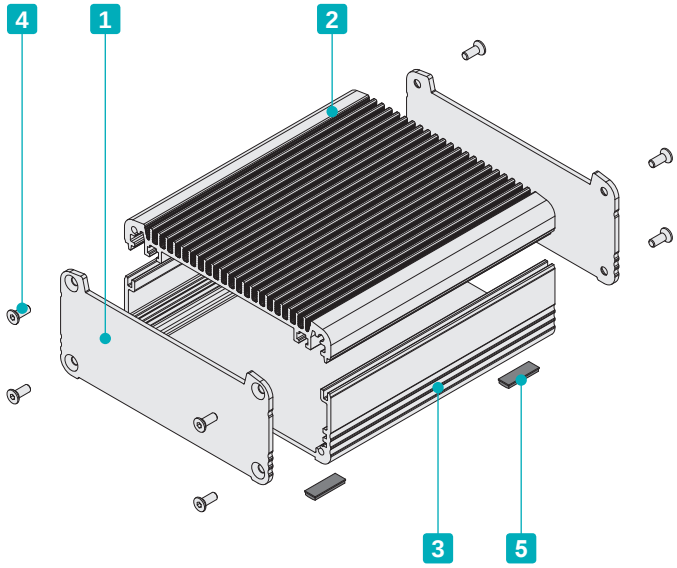

- Aluminum enclosure equipped with a highly efficient heat-sink top cover.
- Suitable to be used as a fanless PC, power amplifier, power supply etc. where heat dissipation is required.
- Selectable in 64 different sizes and 2 different color combinations.
- Grooves for M3 sliding nut are built into the heat-sink top cover and bottom frame (140mm or wider). Optional nut is available.

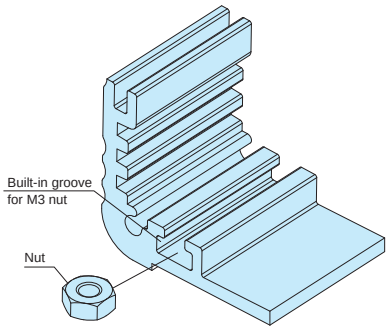

Components

No.	Part name	Pcs	Material	Color / Finish
1	Panel	2	Aluminium A1050P	Metallic silver / Painted (Unfinished inside) : Black / Anodized
2	Heat-sink top cover	1	Extruded aluminium A6063S-T5	Metallic silver / Painted (Unfinished inside) : Black / Anodized
3	Bottom frame	1	Extruded aluminium A6063S-T5	Metallic silver / Painted (Unfinished inside) : Black / Anodized
4	Screw (Hexagonal)	8	Stainless steel	Unfinished
5	Rubber feet	4	Polyurethane • Synthetic rubber	Black

■ Rubber feet material : Polyurethane : EXH8-□ ~ 19-□ models • Synthetic rubber : EXH23-□ ~ 29-□ models.

Color Type

Code	S S Silver / Silver	B B Black / Black
Color		

Included screws
EXH8-□ models : M2.5-8 x 8 pcs
EXH11-□, 14-□ models : M3-8 x 8 pcs
EXH19-□ models : M4-10 x 8 pcs
EXH23-□, 29-□ models : M5-10 x 8 pcs
※Hexagonal wrench included.

EXH dimensions

■ DXF/DWG/PDF/STP drawings available on our website.

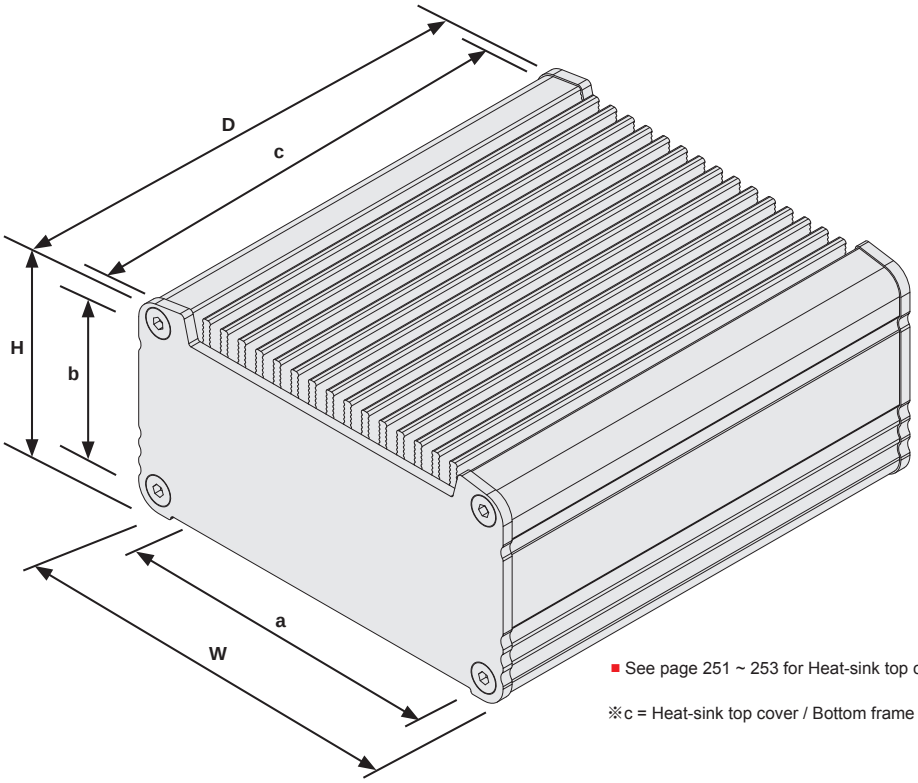

■ See page 251 ~ 253 for Heat-sink top cover / Bottom frame dimensions.

※c = Heat-sink top cover / Bottom frame length.

Product no. / Dimensions

■ Please suffix color code at the end of the product number.

Product no.	External dimensions			Internal dimensions			※Thermal resistance rate (°C/W)
	W	H	D	a	b	c	
EXH 8-3- 6□□	80.6	30.7	60	66	15	56	7.32
EXH 8-3- 9□□	80.6	30.7	90	66	15	86	5.65
EXH 8-3-12□□	80.6	30.7	120	66	15	116	4.72
EXH 8-4- 6□□	80.6	40.7	60	66	25	56	7.32
EXH 8-4- 9□□	80.6	40.7	90	66	25	86	5.65
EXH 8-4-12□□	80.6	40.7	120	66	25	116	4.72
EXH 8-6- 6□□	80.6	55.7	60	66	40	56	7.32
EXH 8-6- 9□□	80.6	55.7	90	66	40	86	5.65
EXH 8-6-12□□	80.6	55.7	120	66	40	116	4.72
EXH11-3- 8□□	106	31.1	78	88.5	14	74	4.82
EXH11-3-12□□	106	31.1	118	88.5	14	114	3.72
EXH11-3-16□□	106	31.1	164	88.5	14	160	3.03
EXH11-5- 8□□	106	46.1	78	88.5	29	74	4.82
EXH11-5-12□□	106	46.1	118	88.5	29	114	3.72
EXH11-5-16□□	106	46.1	164	88.5	29	160	3.03
EXH11-6- 8□□	106	61.1	78	88.5	44	74	4.82
EXH11-6-12□□	106	61.1	118	88.5	44	114	3.72
EXH11-6-16□□	106	61.1	164	88.5	44	160	3.03
EXH14-4-10□□	141	36.1	97	101.8	24.3	93	3.4
EXH14-4-14□□	141	36.1	137	101.8	24.3	133	2.75
EXH14-4-19□□	141	36.1	187	101.8	24.3	183	2.27
EXH14-5-10□□	141	51.1	97	101.8	39.3	93	3.4
EXH14-5-14□□	141	51.1	137	101.8	39.3	133	2.75
EXH14-5-19□□	141	51.1	187	101.8	39.3	183	2.27
EXH14-7-10□□	141	71.1	97	101.8	59.3	93	3.4
EXH14-7-14□□	141	71.1	137	101.8	59.3	133	2.75
EXH14-7-19□□	141	71.1	187	101.8	59.3	183	2.27
EXH14-9-10□□	141	91.1	97	101.8	79.3	93	3.4
EXH14-9-14□□	141	91.1	137	101.8	79.3	133	2.75
EXH14-9-19□□	141	91.1	187	101.8	79.3	183	2.27

※Thermal resistance test condition
- Ambient air cooling.
- Heat-sink fins are set perpendicular to the ground with temperature at 60°C.
- Painted aluminium extrusion.
- Heat source is applied on the opposite side (inner side) of the fins.

Product no.	External dimensions			Internal dimensions			※Thermal resistance rate (°C/W)
	W	H	D	a	b	c	
EXH19- 4-13□□	186.5	43.5	125	131	26.8	120	1.92
EXH19- 4-18□□	186.5	43.5	177	131	26.8	172	1.56
EXH19- 4-23□□	186.5	43.5	230	131	26.8	225	1.32
EXH19- 4-29□□	186.5	43.5	285	131	26.8	280	1.15
EXH19- 6-13□□	186.5	61.5	125	131	44.8	120	1.92
EXH19- 6-18□□	186.5	61.5	177	131	44.8	172	1.56
EXH19- 6-23□□	186.5	61.5	230	131	44.8	225	1.32
EXH19- 6-29□□	186.5	61.5	285	131	44.8	280	1.15
EXH19- 8-13□□	186.5	81.5	125	131	64.8	120	1.92
EXH19- 8-18□□	186.5	81.5	177	131	64.8	172	1.56
EXH19- 8-23□□	186.5	81.5	230	131	64.8	225	1.32
EXH19- 8-29□□	186.5	81.5	285	131	64.8	280	1.15
EXH19-11-13□□	186.5	106.5	125	131	89.8	120	1.92
EXH19-11-18□□	186.5	106.5	177	131	89.8	172	1.56
EXH19-11-23□□	186.5	106.5	230	131	89.8	225	1.32
EXH19-11-29□□	186.5	106.5	285	131	89.8	280	1.15
EXH23- 5-15□□	232	52	153	176	34.8	147	1.47
EXH23- 5-21□□	232	52	213	176	34.8	207	1.2
EXH23- 5-27□□	232	52	273	176	34.8	267	1.03
EXH23- 5-33□□	232	52	333	176	34.8	327	0.91
EXH23- 8-15□□	232	77	153	176	59.8	147	1.47
EXH23- 8-21□□	232	77	213	176	59.8	207	1.2
EXH23- 8-27□□	232	77	273	176	59.8	267	1.03
EXH23- 8-33□□	232	77	333	176	59.8	327	0.91
EXH23-10-15□□	232	102	153	176	84.8	147	1.47
EXH23-10-21□□	232	102	213	176	84.8	207	1.2
EXH23-10-27□□	232	102	273	176	84.8	267	1.03
EXH23-10-33□□	232	102	333	176	84.8	327	0.91
NEW EXH29- 8-23□□	287.5	77.5	234	230	59.5	228	0.97
NEW EXH29- 8-30□□	287.5	77.5	304	230	59.5	298	0.82
NEW EXH29- 8-38□□	287.5	77.5	384	230	59.5	378	0.71
NEW EXH29-13-23□□	287.5	127.5	234	230	109.5	228	0.97
NEW EXH29-13-30□□	287.5	127.5	304	230	109.5	298	0.82
NEW EXH29-13-38□□	287.5	127.5	384	230	109.5	378	0.71

■ Custom length is available.

EXHE series HEAT-SINK ALUMINIUM EMC SHIELDED ENCLOSURE

NEW

Heat Resistant

EMC Shielding Effects

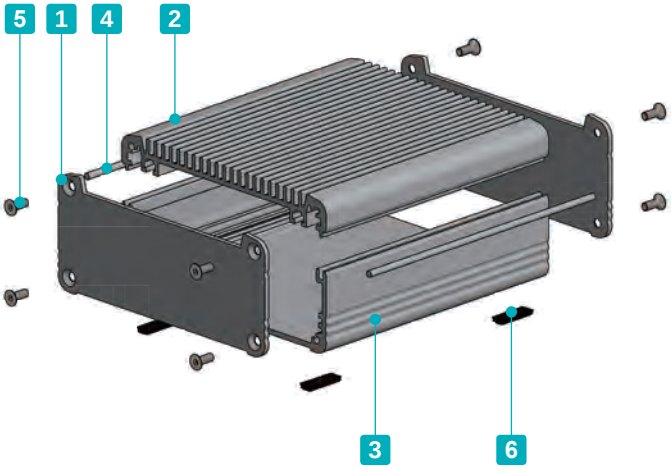

- EMC shielding is achieved by having the unfinished inner sides of the heat-sink top cover, bottom frame and panels, as well as the shielding gasket in contact with one another.
- Aluminum enclosure equipped with a highly efficient heat-sink top cover.
- Grooves for M3 sliding nut are built into the heat-sink top cover and bottom frame (140mm or wider). Optional nut is available.

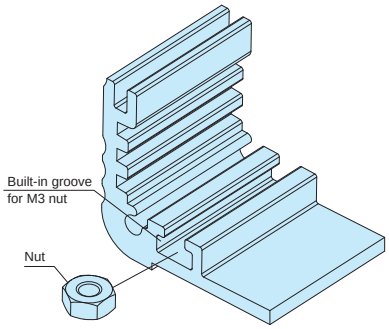

Components

No.	Part name	Pcs	Material	Color / Finish
1	Panel	2	Aluminium A1050P	Metallic silver / Painted (Unfinished inside)
2	Heat-sink top cover	1	Extruded aluminium A6063S-T5	Metallic silver / Painted (Unfinished inside)
3	Bottom frame	1	Extruded aluminium A6063S-T5	Metallic silver / Painted (Unfinished inside)
4	Fabric-over-foam gasket	2	Conductive fabric : TPE	Metallic gray
5	Screw (Hexagonal)	8	Stainless steel	Unfinished
6	Rubber feet	4	Polyurethane • Synthetic rubber	Black

■ Rubber feet material : Polyurethane : EXHE8-□ ~ 19-□models • Synthetic rubber : EXHE23-□ ~ 29-□ models.

How to install shield gaskets

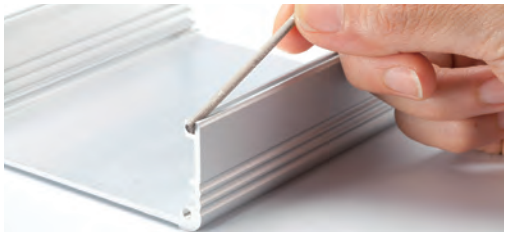

■ Insert fabric-over-foam gaskets into the joint-grooves on both sides of the bottom cover.

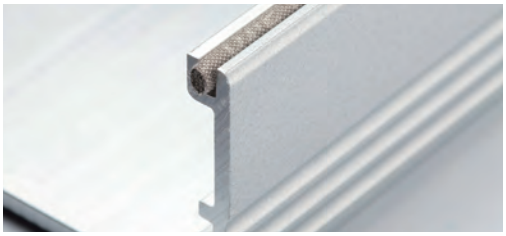

■ Ensure that a small portion of the fabric-over-foam gaskets protrude out in order to maintain connections with the end panels.

Included screws
EXHE8-□ models : M2.5-8 x 8 pcs
EXHE11-□, 14-□ models : M3-8 x 8 pcs
EXHE19-□ models : M4-10 x 8 pcs
EXHE23-□, 29-□ models : M5-10 x 8 pcs
※Hexagonal wrench included.

EXHE dimensions

■ DXF/DWG/PDF/STP drawings available on our website.

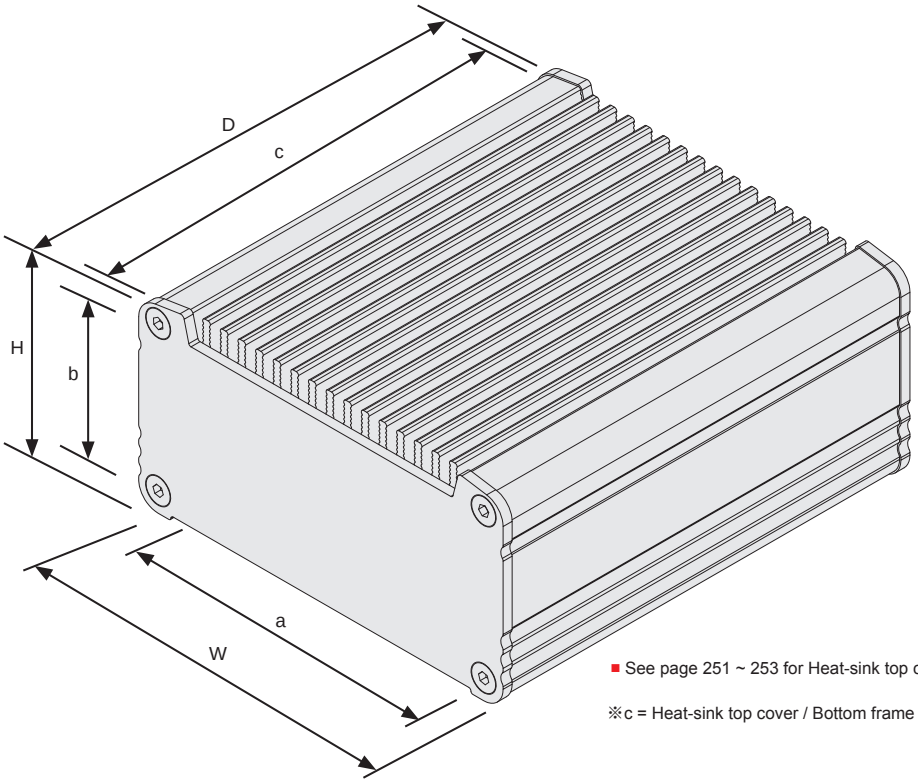

■ See page 251 ~ 253 for Heat-sink top cover / Bottom frame dimensions.

※c = Heat-sink top cover / Bottom frame length.

Product no. / Dimensions

Product no.	External dimensions			Internal dimensions			※Thermal resistance rate (°C/W)
	W	H	D	a	b	c	
EXHE 8-3- 6SS	80.6	30.7	60	66	15	56	7.32
EXHE 8-3- 9SS	80.6	30.7	90	66	15	86	5.65
EXHE 8-3-12SS	80.6	30.7	120	66	15	116	4.72
EXHE 8-4- 6SS	80.6	40.7	60	66	25	56	7.32
EXHE 8-4- 9SS	80.6	40.7	90	66	25	86	5.65
EXHE 8-4-12SS	80.6	40.7	120	66	25	116	4.72
EXHE 8-6- 6SS	80.6	55.7	60	66	40	56	7.32
EXHE 8-6- 9SS	80.6	55.7	90	66	40	86	5.65
EXHE 8-6-12SS	80.6	55.7	120	66	40	116	4.72
EXHE11-3- 8SS	106	31.1	78	88.5	14	74	4.82
EXHE11-3-12SS	106	31.1	118	88.5	14	114	3.72
EXHE11-3-16SS	106	31.1	164	88.5	14	160	3.03
EXHE11-5- 8SS	106	46.1	78	88.5	29	74	4.82
EXHE11-5-12SS	106	46.1	118	88.5	29	114	3.72
EXHE11-5-16SS	106	46.1	164	88.5	29	160	3.03
EXHE11-6- 8SS	106	61.1	78	88.5	44	74	4.82
EXHE11-6-12SS	106	61.1	118	88.5	44	114	3.72
EXHE11-6-16SS	106	61.1	164	88.5	44	160	3.03
EXHE14-4-10SS	141	36.1	97	101.8	24.3	93	3.4
EXHE14-4-14SS	141	36.1	137	101.8	24.3	133	2.75
EXHE14-4-19SS	141	36.1	187	101.8	24.3	183	2.27
EXHE14-5-10SS	141	51.1	97	101.8	39.3	93	3.4
EXHE14-5-14SS	141	51.1	137	101.8	39.3	133	2.75
EXHE14-5-19SS	141	51.1	187	101.8	39.3	183	2.27
EXHE14-7-10SS	141	71.1	97	101.8	59.3	93	3.4
EXHE14-7-14SS	141	71.1	137	101.8	59.3	133	2.75
EXHE14-7-19SS	141	71.1	187	101.8	59.3	183	2.27
EXHE14-9-10SS	141	91.1	97	101.8	79.3	93	3.4
EXHE14-9-14SS	141	91.1	137	101.8	79.3	133	2.75
EXHE14-9-19SS	141	91.1	187	101.8	79.3	183	2.27

※Thermal resistance test condition
- Ambient air cooling.
- Heat-sink fins are set perpendicular to the ground with temperature at 60°C.
- Painted aluminium extrusion.
- Heat source is applied on the opposite side (inner side) of the fins.

Product no.	External dimensions			Internal dimensions			※Thermal resistance rate (°C/W)
	W	H	D	a	b	c	
EXHE19- 4-13SS	186.5	43.5	125	131	26.8	120	1.92
EXHE19- 4-18SS	186.5	43.5	177	131	26.8	172	1.56
EXHE19- 4-23SS	186.5	43.5	230	131	26.8	225	1.32
EXHE19- 4-29SS	186.5	43.5	285	131	26.8	280	1.15
EXHE19- 6-13SS	186.5	61.5	125	131	44.8	120	1.92
EXHE19- 6-18SS	186.5	61.5	177	131	44.8	172	1.56
EXHE19- 6-23SS	186.5	61.5	230	131	44.8	225	1.32
EXHE19- 6-29SS	186.5	61.5	285	131	44.8	280	1.15
EXHE19- 8-13SS	186.5	81.5	125	131	64.8	120	1.92
EXHE19- 8-18SS	186.5	81.5	177	131	64.8	172	1.56
EXHE19- 8-23SS	186.5	81.5	230	131	64.8	225	1.32
EXHE19- 8-29SS	186.5	81.5	285	131	64.8	280	1.15
EXHE19-11-13SS	186.5	106.5	125	131	89.8	120	1.92
EXHE19-11-18SS	186.5	106.5	177	131	89.8	172	1.56
EXHE19-11-23SS	186.5	106.5	230	131	89.8	225	1.32
EXHE19-11-29SS	186.5	106.5	285	131	89.8	280	1.15
EXHE23- 5-15SS	232	52	153	176	34.8	147	1.47
EXHE23- 5-21SS	232	52	213	176	34.8	207	1.2
EXHE23- 5-27SS	232	52	273	176	34.8	267	1.03
EXHE23- 5-33SS	232	52	333	176	34.8	327	0.91
EXHE23- 8-15SS	232	77	153	176	59.8	147	1.47
EXHE23- 8-21SS	232	77	213	176	59.8	207	1.2
EXHE23- 8-27SS	232	77	273	176	59.8	267	1.03
EXHE23- 8-33SS	232	77	333	176	59.8	327	0.91
EXHE23-10-15SS	232	102	153	176	84.8	147	1.47
EXHE23-10-21SS	232	102	213	176	84.8	207	1.2
EXHE23-10-27SS	232	102	273	176	84.8	267	1.03
EXHE23-10-33SS	232	102	333	176	84.8	327	0.91
EXHE29- 8-23SS	287.5	77.5	234	230	59,5	228	0.97
EXHE29- 8-30SS	287.5	77.5	304	230	59,5	298	0.82
EXHE29- 8-38SS	287.5	77.5	384	230	59,5	378	0.71
EXHE29-13-23SS	287.5	127.5	234	230	109.5	228	0.97
EXHE29-13-30SS	287.5	127.5	304	230	109.5	298	0.82
EXHE29-13-38SS	287.5	127.5	384	230	109.5	378	0.71

■ Custom length is available.

EXHF series FLANGED HEAT-SINK ALUMINIUM ENCLOSURE

NEW SIZE

Heat Resistant

- Equipped with flanged bracket for easy wall mounting.
- Aluminum enclosure equipped with a highly efficient heat-sink top cover.

EXHF8-□, 11-□, 14-□

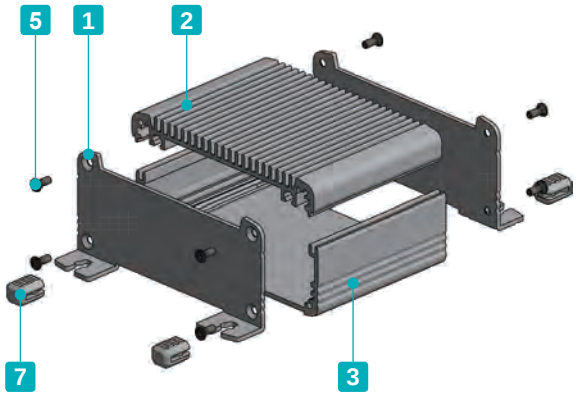

EXHF19-□, 23-□, 29-□

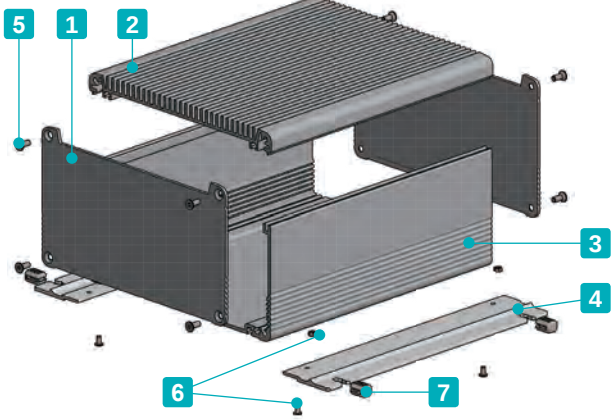

Components

No.	Part name	Pcs	Material	Color / Finish
1	Flanged panel (EXHF8-□, 11-□, 14-□) Panel (EXHF19-□, 23-□, 29-□)	2	Aluminium A1050P	Metallic silver / Painted (Unfinished inside) : Black / Anodized
2	Heat-sink top cover	1	Extruded aluminium A6063S-T5	Metallic silver / Painted (Unfinished inside) : Black / Anodized
3	Bottom frame	1	Extruded aluminium A6063S-T5	Metallic silver / Painted (Unfinished inside) : Black / Anodized
4	Flange bracket	2	Extruded aluminium A6063S-T5	Metallic silver / Painted • Black / Anodized
5	Panel screw (Hexagonal)	8	Stainless steel	Unfinished
6	Flange screw & nut	4 each	Steel	Black trivalent chromate
7	Rubber feet	4	Silicone	Black

Color Type

Code	SS Silver / Silver	BB Black / Black
Color	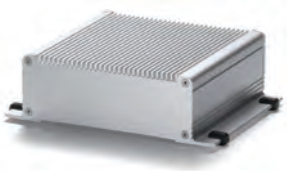	

Included screws
EXHF8-□ models : M2.5-8 x 8 pcs
EXHF11-□, 14-□ models : M3-8 x 8 pcs
EXHF19-□ models : M4-10 x 8 pcs
EXHF23-□, 29-□ models : M5-10 x 8 pcs
※Hexagonal wrench included.

EXHF dimensions

■ DXF/DWG/PDF/STP drawings available on our website.

EXHF8-□, 11-□, 14-□

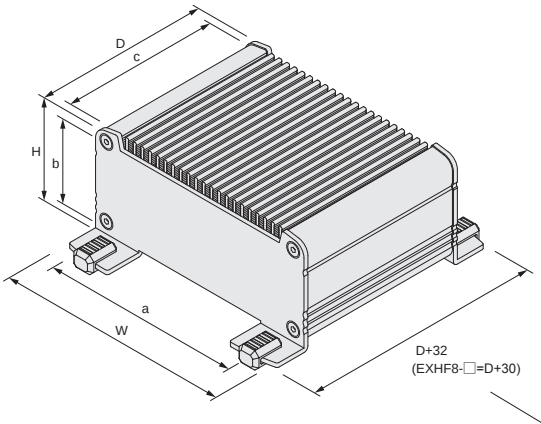

EXHF19-□, 23-□, 29-□

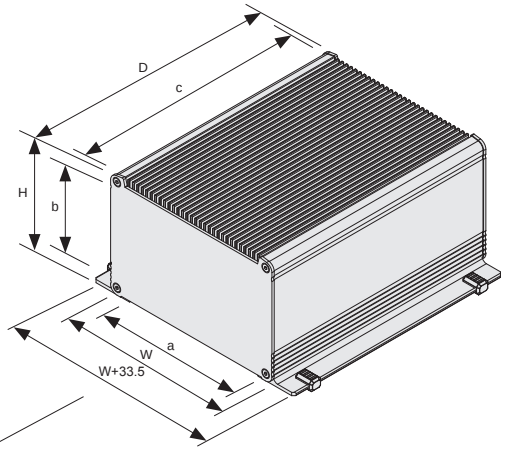

■ See page 251 ~ 253 for Heat-sink top cover / Bottom frame dimensions.
※c = Heat-sink top cover / Bottom frame length.

*Rubber feet dimensions are not included.

Product no. / Dimensions

■ Please suffix color code at the end of the product number.

Product no.	External dimensions			Internal dimensions			※Thermal resistance rate (°C/W)
	W	H	D	a	b	c	
NEW EXHF 8-3- 6□□	80.6	32.8	60	66	15	56	7.32
NEW EXHF 8-3- 9□□	80.6	32.8	90	66	15	86	5.65
NEW EXHF 8-3-12□□	80.6	32.8	120	66	15	116	4.72
NEW EXHF 8-4- 6□□	80.6	42.8	60	66	25	56	7.32
NEW EXHF 8-4- 9□□	80.6	42.8	90	66	25	86	5.65
NEW EXHF 8-4-12□□	80.6	42.8	120	66	25	116	4.72
NEW EXHF 8-6- 6□□	80.6	57.8	60	66	40	56	7.32
NEW EXHF 8-6- 9□□	80.6	57.8	90	66	40	86	5.65
NEW EXHF 8-6-12□□	80.6	57.8	120	66	40	116	4.72
NEW EXHF11-3- 8□□	106	33.1	78	88.5	14	74	4.82
NEW EXHF11-3-12□□	106	33.1	118	88.5	14	114	3.72
NEW EXHF11-3-16□□	106	33.1	164	88.5	14	160	3.03
NEW EXHF11-5- 8□□	106	48.1	78	88.5	29	74	4.82
NEW EXHF11-5-12□□	106	48.1	118	88.5	29	114	3.72
NEW EXHF11-5-16□□	106	48.1	164	88.5	29	160	3.03
NEW EXHF11-6- 8□□	106	63.1	78	88.5	44	74	4.82
NEW EXHF11-6-12□□	106	63.1	118	88.5	44	114	3.72
NEW EXHF11-6-16□□	106	63.1	164	88.5	44	160	3.03
NEW EXHF14-4-10□□	141	38.1	97	101.8	24.3	93	3.4
NEW EXHF14-4-14□□	141	38.1	137	101.8	24.3	133	2.75
NEW EXHF14-4-19□□	141	38.1	187	101.8	24.3	183	2.27
NEW EXHF14-5-10□□	141	53.1	97	101.8	39.3	93	3.4
NEW EXHF14-5-14□□	141	53.1	137	101.8	39.3	133	2.75
NEW EXHF14-5-19□□	141	53.1	187	101.8	39.3	183	2.27
NEW EXHF14-7-10□□	141	73.1	97	101.8	59.3	93	3.4
NEW EXHF14-7-14□□	141	73.1	137	101.8	59.3	133	2.75
NEW EXHF14-7-19□□	141	73.1	187	101.8	59.3	183	2.27
NEW EXHF14-9-10□□	141	93.1	97	101.8	79.3	93	3.4
NEW EXHF14-9-14□□	141	93.1	137	101.8	79.3	133	2.75
NEW EXHF14-9-19□□	141	93.1	187	101.8	79.3	183	2.27

※Thermal resistance test condition
- Ambient air cooling.
- Heat-sink fins are set perpendicular to the ground with temperature at 60°C.
- Painted aluminium extrusion.
- Heat source is applied on the opposite side (inner side) of the fins.

Product no.	External dimensions			Internal dimensions			※Thermal resistance rate (°C/W)
	W	H	D	a	b	c	
EXHF19- 4-13□□	186.5	45.25	125	131	26.8	120	1.92
EXHF19- 4-18□□	186.5	45.25	177	131	26.8	172	1.56
EXHF19- 4-23□□	186.5	45.25	230	131	26.8	225	1.32
EXHF19- 4-29□□	186.5	45.25	285	131	26.8	280	1.15
EXHF19- 6-13□□	186.5	63.25	125	131	44.8	120	1.92
EXHF19- 6-18□□	186.5	63.25	177	131	44.8	172	1.56
EXHF19- 6-23□□	186.5	63.25	230	131	44.8	225	1.32
EXHF19- 6-29□□	186.5	63.25	285	131	44.8	280	1.15
EXHF19- 8-13□□	186.5	83.25	125	131	64.8	120	1.92
EXHF19- 8-18□□	186.5	83.25	177	131	64.8	172	1.56
EXHF19- 8-23□□	186.5	83.25	230	131	64.8	225	1.32
EXHF19- 8-29□□	186.5	83.25	285	131	64.8	280	1.15
EXHF19-11-13□□	186.5	108.25	125	131	89.8	120	1.92
EXHF19-11-18□□	186.5	108.25	177	131	89.8	172	1.56
EXHF19-11-23□□	186.5	108.25	230	131	89.8	225	1.32
EXHF19-11-29□□	186.5	108.25	285	131	89.8	280	1.15
EXHF23- 5-15□□	232	53.5	153	176	34.8	147	1.47
EXHF23- 5-21□□	232	53.5	213	176	34.8	207	1.2
EXHF23- 5-27□□	232	53.5	273	176	34.8	267	1.03
EXHF23- 5-33□□	232	53.5	333	176	34.8	327	0.91
EXHF23- 8-15□□	232	78.5	153	176	59.8	147	1.47
EXHF23- 8-21□□	232	78.5	213	176	59.8	207	1.2
EXHF23- 8-27□□	232	78.5	273	176	59.8	267	1.03
EXHF23- 8-33□□	232	78.5	333	176	59.8	327	0.91
EXHF23-10-15□□	232	103.5	153	176	84.8	147	1.47
EXHF23-10-21□□	232	103.5	213	176	84.8	207	1.2
EXHF23-10-27□□	232	103.5	273	176	84.8	267	1.03
EXHF23-10-33□□	232	103.5	333	176	84.8	327	0.91
NEW EXHF29- 8-23□□	287.5	78.75	234	230	59.5	228	0.97
NEW EXHF29- 8-30□□	287.5	78.75	304	230	59.5	298	0.82
NEW EXHF29- 8-38□□	287.5	78.75	384	230	59.5	378	0.71
NEW EXHF29-13-23□□	287.5	128.75	234	230	109.5	228	0.97
NEW EXHF29-13-30□□	287.5	128.75	304	230	109.5	298	0.82
NEW EXHF29-13-38□□	287.5	128.75	384	230	109.5	378	0.71

■ Custom length is available.

■ Grooves for M3 sliding nut are built into the heat-sink top cover and bottom frame (140mm or wider). Optional nut is available.

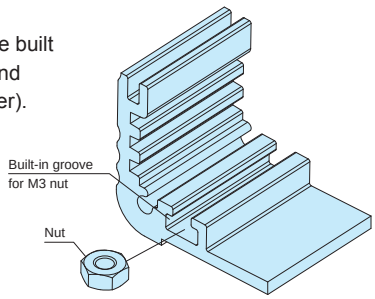

■ Flange bracket is installed as per the diagram below.

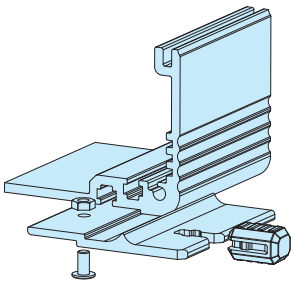

EXHFE series FLANGED HEAT-SINK ALUMINIUM EMC SHIELDED ENCLOSURE

NEW

Heat Resistant

EMC Shielding Effects

- EMC shielding is achieved by having the unfinished internal parts of the enclosure, as well as the fabric-over-foam gasket, in contact with one another.
- Aluminum enclosure equipped with a highly efficient heat-sink top cover.
- Equipped with flanged bracket for easy wall mounting.

EXHFE8-□, 11-□, 14-□

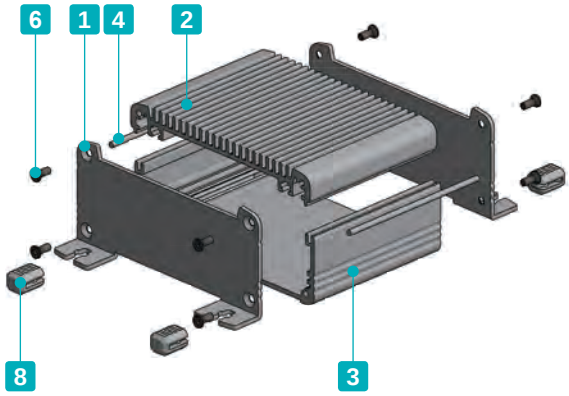

EXHFE19-□, 23-□, 29-□

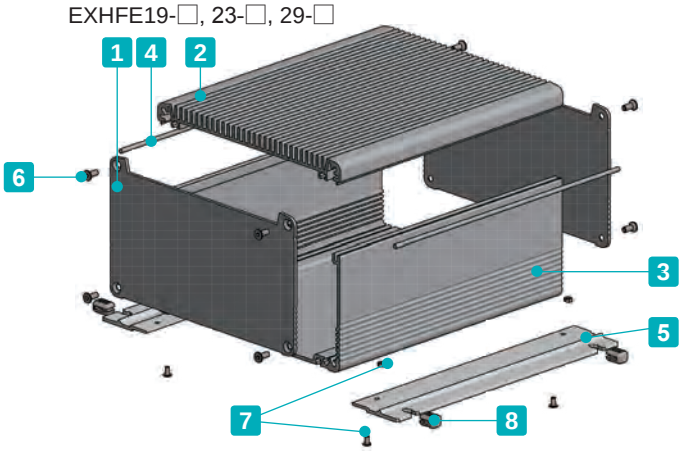

Components

No.	Part name	Pcs	Material	Color / Finish
1	Flanged panel (EXHF8-□, 11-□, 14-□) Panel (EXHF19-□, 23-□, 29-□)	2	Aluminium A1050P	Metallic silver / Painted (Unfinished inside)
2	Heat-sink top cover	1	Extruded aluminium A6063S-T5	Metallic silver / Painted (Unfinished inside)
3	Bottom frame	1	Extruded aluminium A6063S-T5	Metallic silver / Painted (Unfinished inside)
4	Fabric-over-foam gasket	2	Conductive fabric : TPE	Metallic gray
5	Flange bracket	2	Extruded aluminium A6063S-T5	Metallic silver / Painted
6	Panel screw (Hexagonal)	8	Stainless steel	Unfinished
7	Flange screw & nut	4 each	Steel	Black trivalent chromate
8	Rubber feet	4	Silicone	Black

How to install shield gaskets

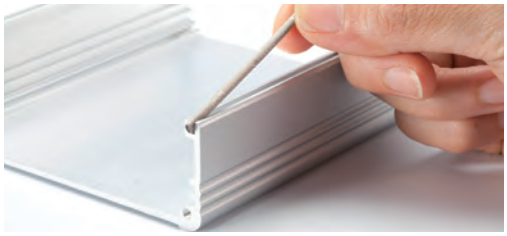

- Insert fabric-over-foam gaskets into the joint-grooves on both sides of the bottom cover.

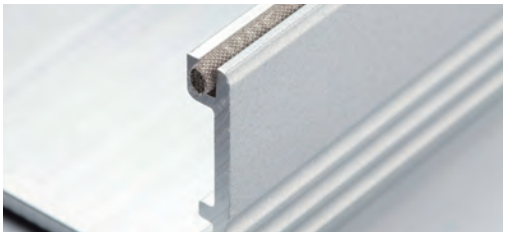

- Ensure that a small portion of the fabric-over-foam gaskets protrude out in order to maintain connections with the end panels.

Included screws
EXHFE8-□ models : M2.5-8 x 8 pcs
EXHFE11-□, 14-□ models : M3-8 x 8 pcs
EXHFE19-□ models : M4-10 x 8 pcs
EXHFE23-□, 29-□ models : M5-10 x 8 pcs
※Hexagonal wrench included.

EXHFE dimensions

■ DXF/DWG/PDF/STP drawings available on our website.

EXHFE8-□, 11-□, 14-□

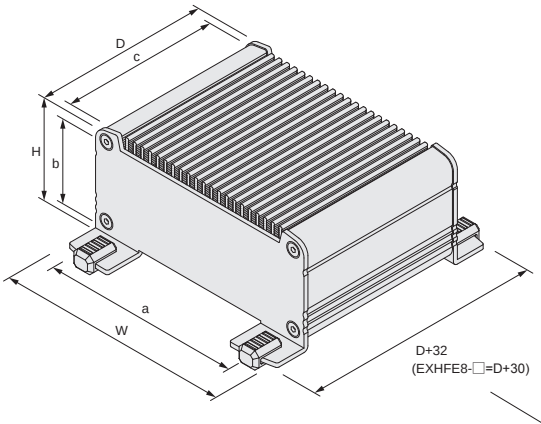

EXHFE19-□, 23-□, 29-□

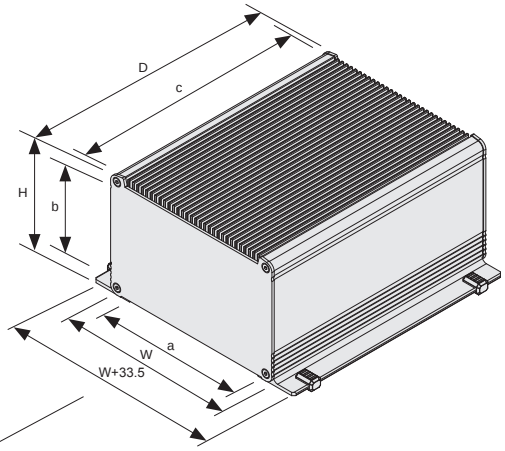

■ See page 251 ~ 253 for Heat-sink top cover / Bottom frame dimensions.
※c = Heat-sink top cover / Bottom frame length.

*Rubber feet dimensions are not included.

Product no. / Dimensions

Product no.	External dimensions			Internal dimensions			※Thermal resistance rate (°C/W)
	W	H	D	a	b	c	
EXHFE 8-3- 6SS	80.6	32.8	60	66	15	56	7.32
EXHFE 8-3- 9SS	80.6	32.8	90	66	15	86	5.65
EXHFE 8-3-12SS	80.6	32.8	120	66	15	116	4.72
EXHFE 8-4- 6SS	80.6	42.8	60	66	25	56	7.32
EXHFE 8-4- 9SS	80.6	42.8	90	66	25	86	5.65
EXHFE 8-4-12SS	80.6	42.8	120	66	25	116	4.72
EXHFE 8-6- 6SS	80.6	57.8	60	66	40	56	7.32
EXHFE 8-6- 9SS	80.6	57.8	90	66	40	86	5.65
EXHFE 8-6-12SS	80.6	57.8	120	66	40	116	4.72
EXHFE11-3- 8SS	106	33.1	78	88.5	14	74	4.82
EXHFE11-3-12SS	106	33.1	118	88.5	14	114	3.72
EXHFE11-3-16SS	106	33.1	164	88.5	14	160	3.03
EXHFE11-5- 8SS	106	48.1	78	88.5	29	74	4.82
EXHFE11-5-12SS	106	48.1	118	88.5	29	114	3.72
EXHFE11-5-16SS	106	48.1	164	88.5	29	160	3.03
EXHFE11-6- 8SS	106	63.1	78	88.5	44	74	4.82
EXHFE11-6-12SS	106	63.1	118	88.5	44	114	3.72
EXHFE11-6-16SS	106	63.1	164	88.5	44	160	3.03
EXHFE14-4-10SS	141	38.1	97	101.8	24.3	93	3.4
EXHFE14-4-14SS	141	38.1	137	101.8	24.3	133	2.75
EXHFE14-4-19SS	141	38.1	187	101.8	24.3	183	2.27
EXHFE14-5-10SS	141	53.1	97	101.8	39.3	93	3.4
EXHFE14-5-14SS	141	53.1	137	101.8	39.3	133	2.75
EXHFE14-5-19SS	141	53.1	187	101.8	39.3	183	2.27
EXHFE14-7-10SS	141	73.1	97	101.8	59.3	93	3.4
EXHFE14-7-14SS	141	73.1	137	101.8	59.3	133	2.75
EXHFE14-7-19SS	141	73.1	187	101.8	59.3	183	2.27
EXHFE14-9-10SS	141	93.1	97	101.8	79.3	93	3.4
EXHFE14-9-14SS	141	93.1	137	101.8	79.3	133	2.75
EXHFE14-9-19SS	141	93.1	187	101.8	79.3	183	2.27

※Thermal resistance test condition
- Ambient air cooling.
- Heat-sink fins are set perpendicular to the ground with temperature at 60°C.
- Painted aluminium extrusion.
- Heat source is applied on the opposite side (inner side) of the fins.

Product no.	External dimensions			Internal dimensions			※Thermal resistance rate (°C/W)
	W	H	D	a	b	c	
EXHFE19- 4-13SS	186.5	45.25	125	131	26.8	120	1.92
EXHFE19- 4-18SS	186.5	45.25	177	131	26.8	172	1.56
EXHFE19- 4-23SS	186.5	45.25	230	131	26.8	225	1.32
EXHFE19- 4-29SS	186.5	45.25	285	131	26.8	280	1.15
EXHFE19- 6-13SS	186.5	63.25	125	131	44.8	120	1.92
EXHFE19- 6-18SS	186.5	63.25	177	131	44.8	172	1.56
EXHFE19- 6-23SS	186.5	63.25	230	131	44.8	225	1.32
EXHFE19- 6-29SS	186.5	63.25	285	131	44.8	280	1.15
EXHFE19- 8-13SS	186.5	83.25	125	131	64.8	120	1.92
EXHFE19- 8-18SS	186.5	83.25	177	131	64.8	172	1.56
EXHFE19- 8-23SS	186.5	83.25	230	131	64.8	225	1.32
EXHFE19- 8-29SS	186.5	83.25	285	131	64.8	280	1.15
EXHFE19-11-13SS	186.5	108.25	125	131	89.8	120	1.92
EXHFE19-11-18SS	186.5	108.25	177	131	89.8	172	1.56
EXHFE19-11-23SS	186.5	108.25	230	131	89.8	225	1.32
EXHFE19-11-29SS	186.5	108.25	285	131	89.8	280	1.15
EXHFE23- 5-15SS	232	53.5	153	176	34.8	147	1.47
EXHFE23- 5-21SS	232	53.5	213	176	34.8	207	1.2
EXHFE23- 5-27SS	232	53.5	273	176	34.8	267	1.03
EXHFE23- 5-33SS	232	53.5	333	176	34.8	327	0.91
EXHFE23- 8-15SS	232	78.5	153	176	59.8	147	1.47
EXHFE23- 8-21SS	232	78.5	213	176	59.8	207	1.2
EXHFE23- 8-27SS	232	78.5	273	176	59.8	267	1.03
EXHFE23- 8-33SS	232	78.5	333	176	59.8	327	0.91
EXHFE23-10-15SS	232	103.5	153	176	84.8	147	1.47
EXHFE23-10-21SS	232	103.5	213	176	84.8	207	1.2
EXHFE23-10-27SS	232	103.5	273	176	84.8	267	1.03
EXHFE23-10-33SS	232	103.5	333	176	84.8	327	0.91
EXHFE29- 8-23SS	287.5	78.75	234	230	59.5	228	0.97
EXHFE29- 8-30SS	287.5	78.75	304	230	59.5	298	0.82
EXHFE29- 8-38SS	287.5	78.75	384	230	59.5	378	0.71
EXHFE29-13-23SS	287.5	128.75	234	230	109.5	228	0.97
EXHFE29-13-30SS	287.5	128.75	304	230	109.5	298	0.82
EXHFE29-13-38SS	287.5	128.75	384	230	109.5	378	0.71

■ Custom length is available.

■ Grooves for M3 sliding nut are built into the heat-sink top cover and bottom frame (140mm or wider). Optional nut is available.

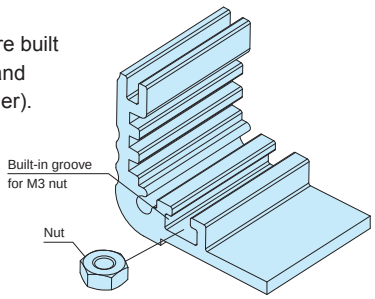

■ Flange bracket is installed as per the diagram below.

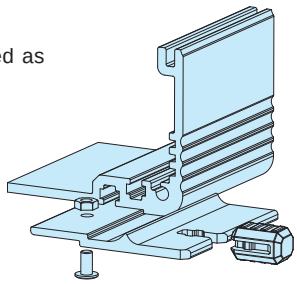

Cross-section view of heat-sink top cover & bottom frame

■ DXF/DWG/PDF/STP drawings available on our website.

EXH • EXHE • EXHF • EXHFE8-3-□

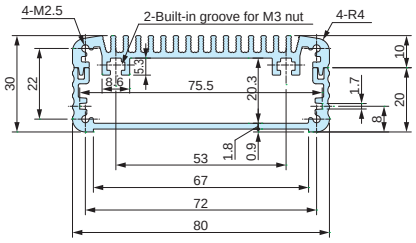

EXH • EXHE • EXHF • EXHFE8-4-□

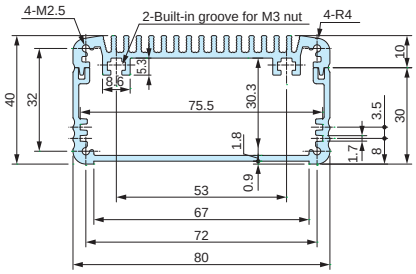

EXH • EXHE • EXHF • EXHFE8-6-□

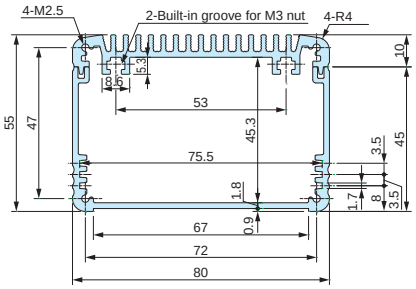

EXH • EXHE • EXHF • EXHFE11-3-□

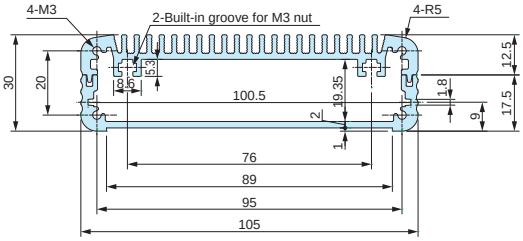

EXH • EXHE • EXHF • EXHFE11-5-□

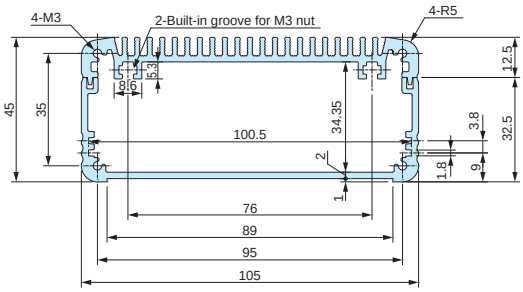

EXH • EXHE • EXHF • EXHFE11-6-□

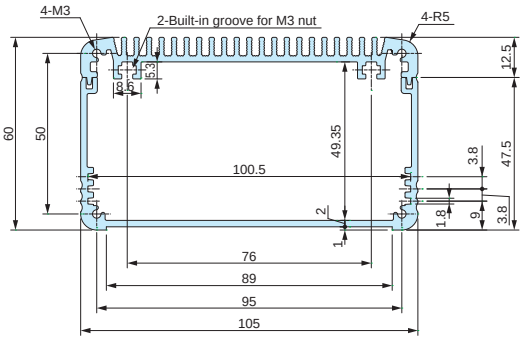

EXH • EXHE • EXHF • EXHFE14-4-□

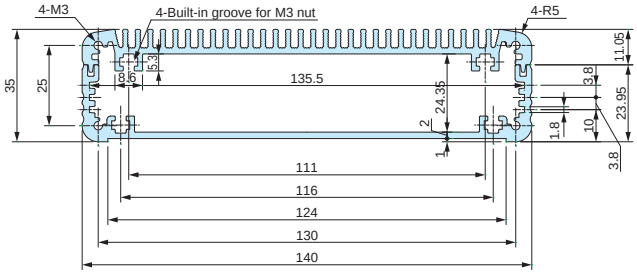

EXH • EXHE • EXHF • EXHFE14-5-□

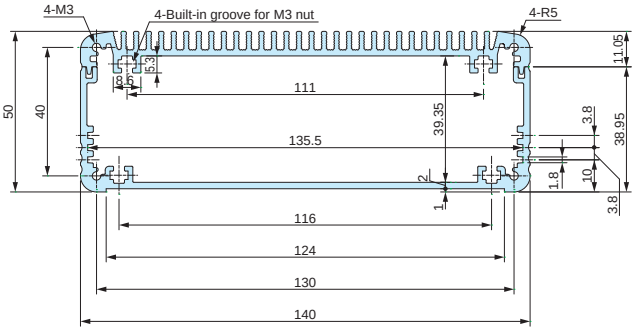

EXH • EXHE • EXHF • EXHFE14-7-□

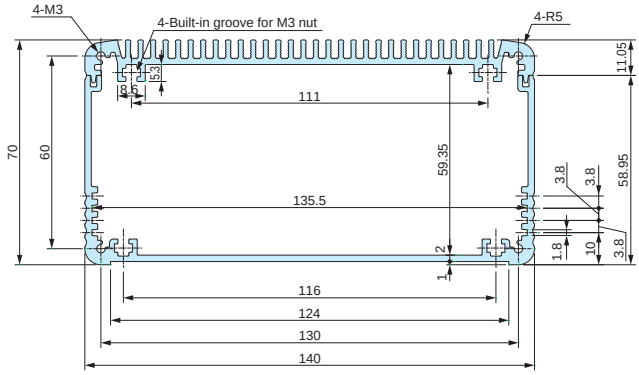

EXH • EXHE • EXHF • EXHFE14-9-□

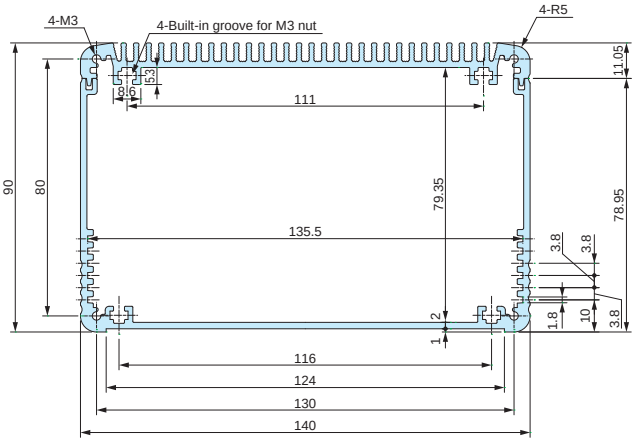

EXH • EXHE • EXHF • EXHFE19-4-□

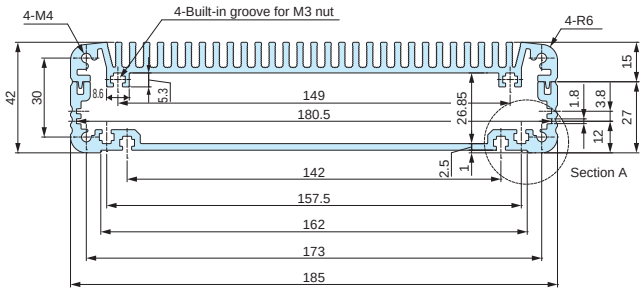

EXH • EXHE • EXHF • EXHFE19-6-□

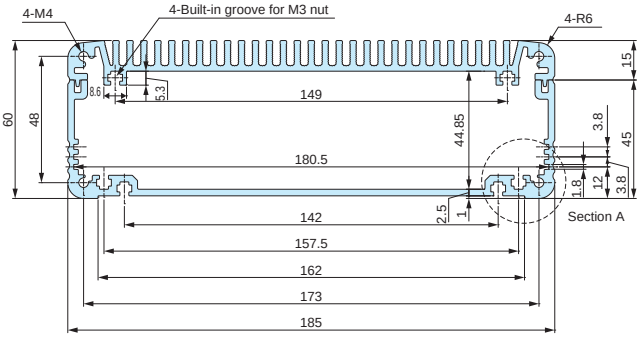

EXH • EXHE • EXHF • EXHFE19-8-□

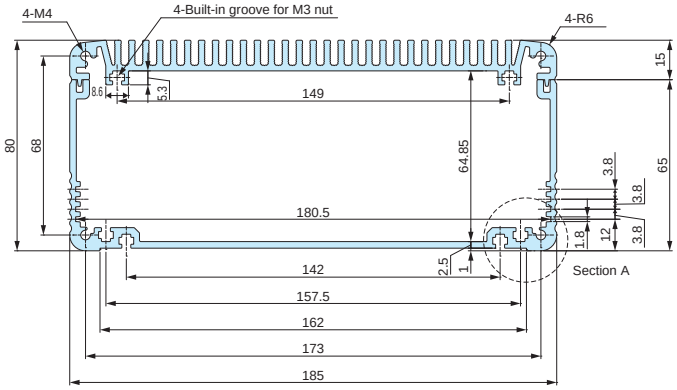

EXH • EXHE • EXHF • EXHFE19-11-□

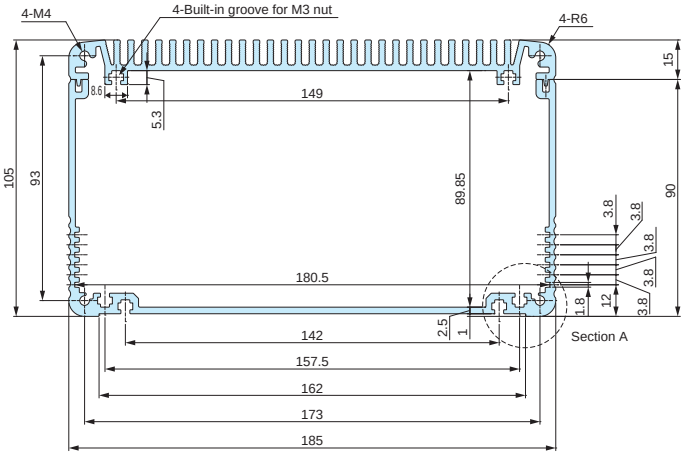

EXH • EXHE • EXHF • EXHFE23-5-□

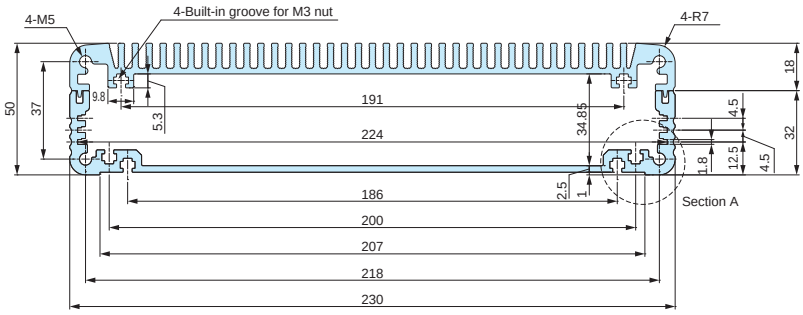

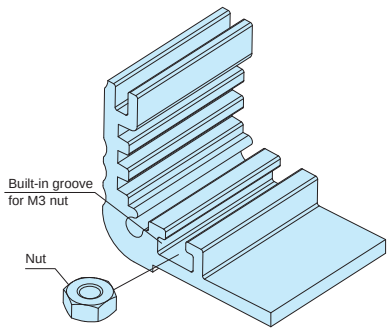

EXH • EXHE • EXHF • EXHFE23-8-□

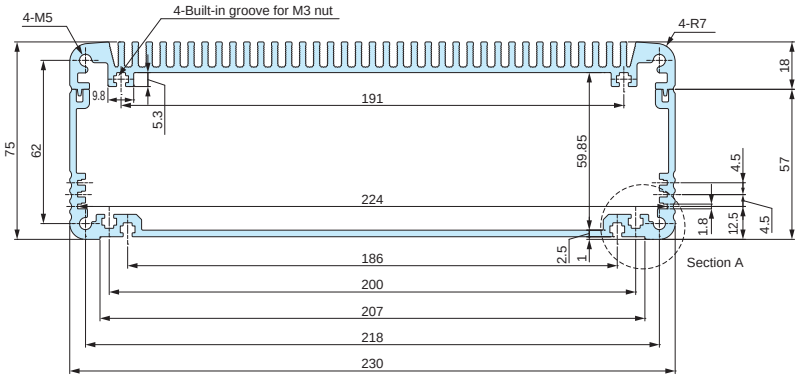

■ Optional M3 nut is available.

Sliding nut can be used on all EXH • EXHE • EXHF • EXHFE models with width 140mm or larger bottom covers, as well as all heat-sink top covers.

See page 221 for MT-3N optional M3 nut.

*See page 253 for detailed dimensions for Section A

Cross-section view of heat-sink top cover & bottom frame

■ DXF/DWG/PDF/STP drawings available on our website.

EXH • EXHE • EXHF • EXHFE23-10-□

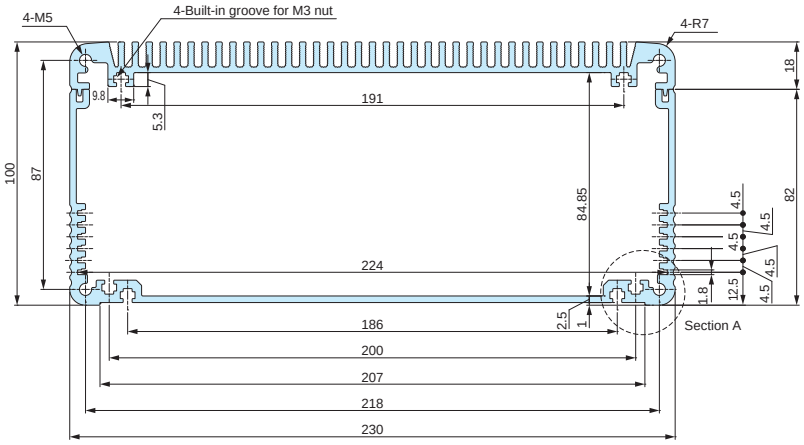

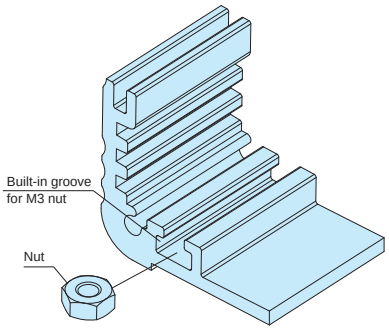

■ Optional M3 nut is available.

Sliding nut can be used on all EXH • EXHE • EXHF • EXHFE models with width 140mm or larger bottom covers, as well as all heat-sink top covers.

See page 221 for MT-3N optional M3 nut.

EXH • EXHE • EXHF • EXHFE29-8-□

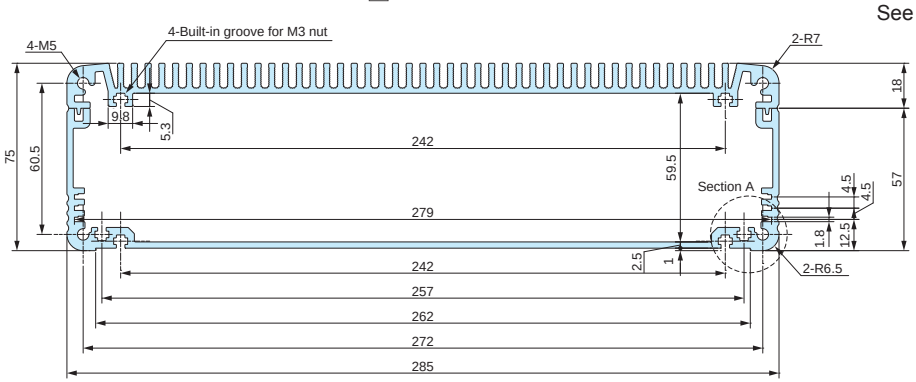

EXH • EXHE • EXHF • EXHFE29-13-□

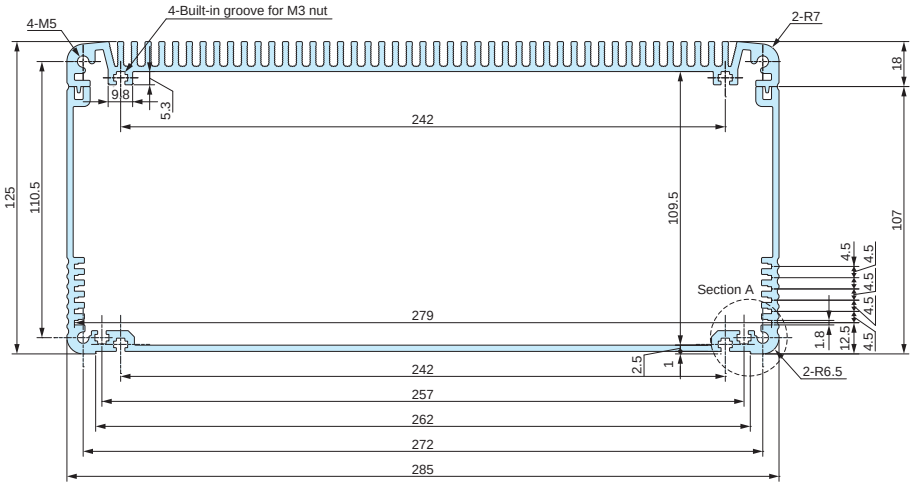

Flange bracket dimensions
(Section A)

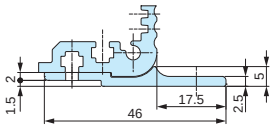

EF series WALL MOUNTING BRACKET for EX • EXH • EXHE

NEW SIZE

Installation Example

- Wall mounting bracket for EX, EXH, and EXHE series. Applicable only for width 185, 230, and 285mm bottom covers.
- Easy installation by inserting the nuts into built-in grooves on EX, EXH, and EXHE bottom cover.
- Rubber feet are included to hide the mounting cutouts when not used for wall mounting, and act as feet stabilizers for desktop use.

EF dimensions

- DXF/DWG/PDF/STP drawings available on our website.

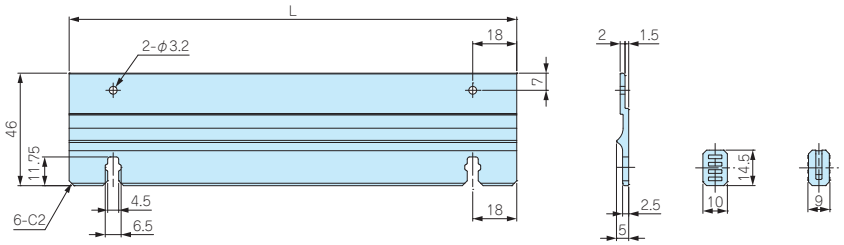

Assembly Drawings

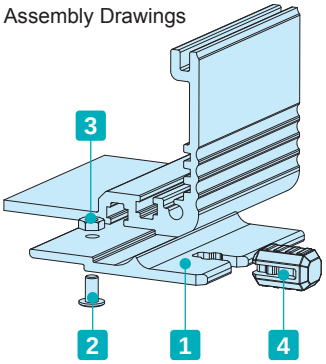

Components

No.	Part name	Pcs	Material	Color / Finish
1	Bracket	2	Extruded aluminium A6063S-T5	Metallic silver / Painted • Black / Anodized
2	Screw	4	Steel	Black trivalent chromate
3	Nut	4	Steel	Black trivalent chromate
4	Rubber feet	4	Silicone	Black

Product no. / Dimensions

Product no.		L	Suitable models
● Metallic silver	● Black		
EF19-13S	EF19-13B	119.5	EX • EXH • EXHE19-□-13
EF19-18S	EF19-18B	171.5	EX • EXH • EXHE19-□-18
EF19-23S	EF19-23B	224.5	EX • EXH • EXHE19-□-23
EF19-29S	EF19-29B	279.5	EX • EXH • EXHE19-□-29
EF23-15S	EF23-15B	146.5	EX • EXH • EXHE23-□-15
EF23-21S	EF23-21B	206.5	EX • EXH • EXHE23-□-21
EF23-27S	EF23-27B	266.5	EX • EXH • EXHE23-□-27
EF23-33S	EF23-33B	326.5	EX • EXH • EXHE23-□-33
NEW EF29-23S	NEW EF29-23B	227.5	EX • EXH • EXHE29-□-23
NEW EF29-30S	NEW EF29-30B	297.5	EX • EXH • EXHE29-□-30
NEW EF29-38S	NEW EF29-38B	377.5	EX • EXH • EXHE29-□-38

HY series HEAT-SINK ALUMINIUM ENCLOSURE

Heat Resistant

Variations of HY series, HYR and HYRH series are also available.
See website for more details.

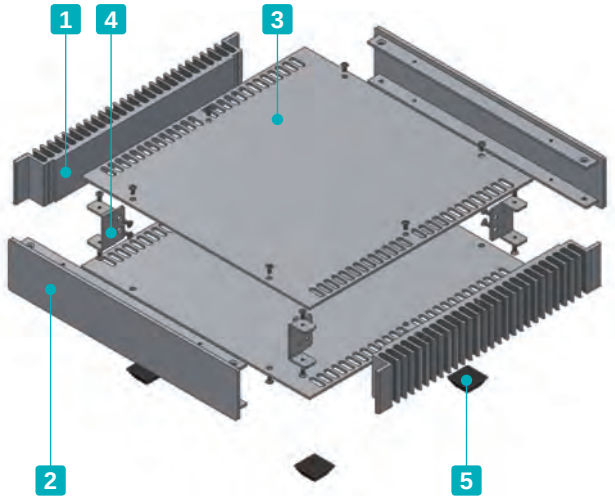

- Stylish and elegantly designed with a hairline finish.
- Excellent cooling performance with the heat-sink side plates.
- Now available in 56 sizes, and 2 different colors.
- Tough and robust enclosure from using aluminium extrusion parts.
- Simple and easy to assemble construction.
- Flat back heat-sink plates for more effective heat spreading.

Included screws
BB color type
M3-6 flat head & Black trivalent chromate x 16 pcs
M3-5 Slotted raised countersunk & Black trivalent chromate x 12 pcs
SS color type
M3-6 flat head & Nickel plated x 16 pcs
M3-5 Slotted raised countersunk & Nickel plated x 12 pcs

Components

No.	Part name	Pcs	Material	Color / Finish
1	Heat-sink side plate	2	Extruded aluminium A6063S-T5	Silver • Black / Anodized
2	Panel	2	Extruded aluminium A6063S-T5	Silver • Black / Hairline brushed & Anodized
3	Top • Bottom cover	2	Aluminium A1050P t=2.0	Silver • Black / Hairline brushed & Anodized
4	Corner support	4	Steel SPCC t=1.6	Trivalent chromate
5	Rubber feet	4	Polyurethane	Black

Accessories (Optional parts)

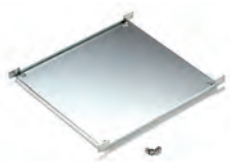

Mounting plate HYC series
See page 257

L-bracket HYCL series
See page 257

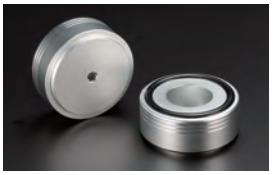

Aluminium isolation feet AFS • AFM series
See page 293 ~ 294

TORX screw - for top / bottom cover MR3-5Z series
See website

HY dimensions

■ DXF/DWG/PDF/STP drawings available on our website.

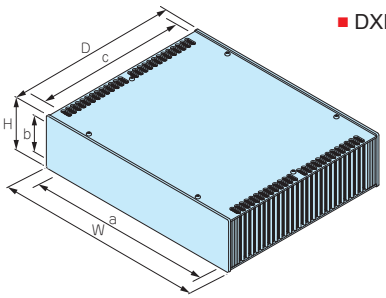

Product no.		External dimensions			Internal dimensions			Weight (kg)
● Silver	● Black	W	H	D	a	b	c	
HY 44-23-23SS	HY 44-23-23BB	230	44	231	186	36	225	1.1
HY 44-23-33SS	HY 44-23-33BB	230	44	330	186	36	324	1.6
HY 44-28-23SS	HY 44-28-23BB	280	44	231	236	36	225	1.4
HY 44-28-33SS	HY 44-28-33BB	280	44	330	236	36	324	1.9
HY 44-33-23SS	HY 44-33-23BB	330	44	231	286	36	225	1.5
HY 44-33-33SS	HY 44-33-33BB	330	44	330	286	36	324	2.2
HY 44-43-23SS	HY 44-43-23BB	430	44	231	386	36	225	1.9
HY 44-43-33SS	HY 44-43-33BB	430	44	330	386	36	324	2.6
HY 70-23-23SS	HY 70-23-23BB	230	70	231	186	62	225	1.6
HY 70-23-33SS	HY 70-23-33BB	230	70	330	186	62	324	2.2
HY 70-28-23SS	HY 70-28-23BB	280	70	231	236	62	225	1.8
HY 70-28-33SS	HY 70-28-33BB	280	70	330	236	62	324	2.5
HY 70-33-23SS	HY 70-33-23BB	330	70	231	286	62	225	2.0
HY 70-33-33SS	HY 70-33-33BB	330	70	330	286	62	324	2.8
HY 70-43-23SS	HY 70-43-23BB	430	70	231	386	62	225	2.3
HY 70-43-33SS	HY 70-43-33BB	430	70	330	386	62	324	3.2
HY 88-23-23SS	HY 88-23-23BB	230	88	231	186	80	225	1.9
HY 88-23-33SS	HY 88-23-33BB	230	88	330	186	80	324	2.6
HY 88-28-23SS	HY 88-28-23BB	280	88	231	236	80	225	2.1
HY 88-28-33SS	HY 88-28-33BB	280	88	330	236	80	324	2.8
HY 88-33-23SS	HY 88-33-23BB	330	88	231	286	80	225	2.3
HY 88-33-33SS	HY 88-33-33BB	330	88	330	286	80	324	3.1
HY 88-43-23SS	HY 88-43-23BB	430	88	231	386	80	225	2.7
HY 88-43-33SS	HY 88-43-33BB	430	88	330	386	80	324	3.6
HY 99-23-23SS	HY 99-23-23BB	230	99	231	186	91	225	2.1
HY 99-23-33SS	HY 99-23-33BB	230	99	330	186	91	324	2.7
HY 99-28-23SS	HY 99-28-23BB	280	99	231	236	91	225	2.3
HY 99-28-33SS	HY 99-28-33BB	280	99	330	236	91	324	3.1
HY 99-33-23SS	HY 99-33-23BB	330	99	231	286	91	225	2.5
HY 99-33-33SS	HY 99-33-33BB	330	99	330	286	91	324	3.4
HY 99-43-23SS	HY 99-43-23BB	430	99	231	386	91	225	2.9
HY 99-43-33SS	HY 99-43-33BB	430	99	330	386	91	324	3.9
HY133-23-23SS	HY133-23-23BB	230	132.5	231	186	124.5	225	2.6
HY133-23-33SS	HY133-23-33BB	230	132.5	330	186	124.5	324	3.4
HY133-28-23SS	HY133-28-23BB	280	132.5	231	236	124.5	225	2.8
HY133-28-33SS	HY133-28-33BB	280	132.5	330	236	124.5	324	3.8
HY133-33-23SS	HY133-33-23BB	330	132.5	231	286	124.5	225	3.0
HY133-33-33SS	HY133-33-33BB	330	132.5	330	286	124.5	324	4.1
HY133-43-23SS	HY133-43-23BB	430	132.5	231	386	124.5	225	3.5
HY133-43-33SS	HY133-43-33BB	430	132.5	330	386	124.5	324	4.7
HY149-23-23SS	HY149-23-23BB	230	149	231	186	141	225	2.8
HY149-23-33SS	HY149-23-33BB	230	149	330	186	141	324	3.8
HY149-28-23SS	HY149-28-23BB	280	149	231	236	141	225	3.1
HY149-28-33SS	HY149-28-33BB	280	149	330	236	141	324	4.2
HY149-33-23SS	HY149-33-23BB	330	149	231	286	141	225	3.3
HY149-33-33SS	HY149-33-33BB	330	149	330	286	141	324	4.5
HY149-43-23SS	HY149-43-23BB	430	149	231	386	141	225	3.8
HY149-43-33SS	HY149-43-33BB	430	149	330	386	141	324	5.1
HY177-23-23SS	HY177-23-23BB	230	177	231	186	169	225	3.4
HY177-23-33SS	HY177-23-33BB	230	177	330	186	169	324	4.5
HY177-28-23SS	HY177-28-23BB	280	177	231	236	169	225	3.6
HY177-28-33SS	HY177-28-33BB	280	177	330	236	169	324	4.8
HY177-33-23SS	HY177-33-23BB	330	177	231	286	169	225	3.9
HY177-33-33SS	HY177-33-33BB	330	177	330	286	169	324	5.2
HY177-43-23SS	HY177-43-23BB	430	177	231	386	169	225	4.5
HY177-43-33SS	HY177-43-33BB	430	177	330	386	169	324	5.8

HYC series MOUNTING PLATE for HY • HYR • HYRH

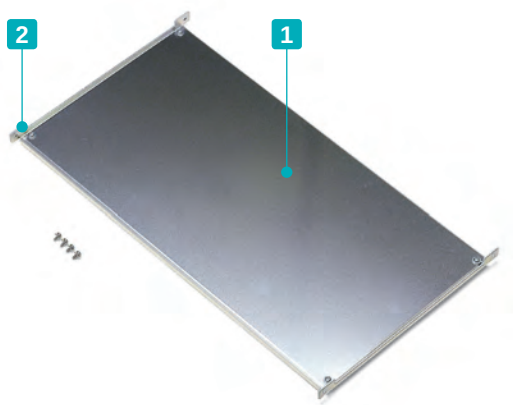

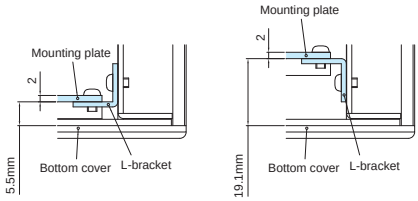

HYC dimensions

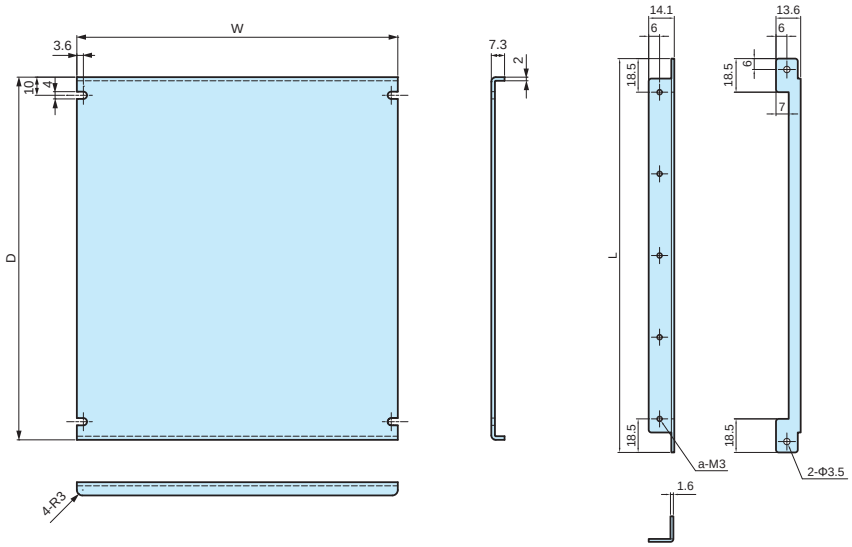

■ DXF/DWG/PDF/STP drawings available on our website.

■ Mounting plate and L-bracket set.

Components

No.	Part name	Pcs	Material	Color / Finish
1	Mounting plate	1	Aluminium A1050P t=2.0	Unfinished
2	L-bracket	2	Steel SPCC t=1.6	Trivalent chromate
—	Screw	1 set	Steel M3	Trivalent chromate

Product no. / Dimensions

Product no.	W	D	L	a	Suitable models	Weight (g)
HYC23-23	177	200	217	5	HY□-23-23	300
HYC23-28	227	200	217	5	HY□-28-23	350
HYC23-33	277	200	217	5	HY□-33-23	410
HYC23-43	377	200	217	5	HY□-43-23	520
HYC33-23	177	299	316	7	HY□-23-33	450
HYC33-28	227	299	316	7	HY□-28-33	550
HYC33-33	277	299	316	7	HY□-33-33	710
HYC33-43	377	299	316	7	HY□-43-33	800

Clinching stud customization service available.

HYCL series L-bracket for HY • HYR • HYRH

HYCL dimensions

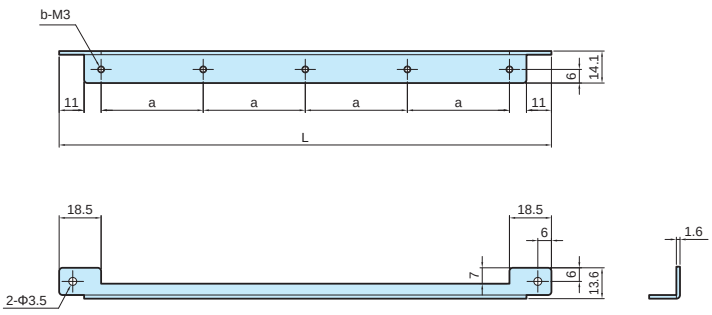

■ DXF/DWG/PDF/STP drawings available on our website.

■ Simple L-bracket and screw set.

■ Use with your original mounting plate or PCB.

Components

No.	Part name	Material	Color / Finish
1	L-bracket	Steel t=1.6	Trivalent chromate
2	Screw	Steel M3	Trivalent chromate

Product no. / Dimensions

Product no.	L	a	b	Pack of
HYCL-23	217	45	5	2
HYCL-33	316	46.5	7	2

HY series APPLICATION EXAMPLE

Complete Balanced Special Tuned DC Headphone Amplifier

Product by Sanyo Kasei (Japan)

Energy Creation Power Conditioner Development Kit

Product by Smart Energy Laboratory (Japan)

Linear Power Supply

Product by UpTone Audio (USA)

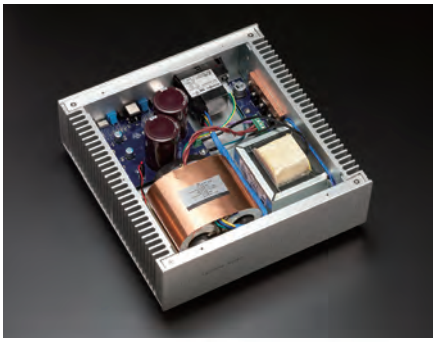

Industrial Fanless PC

Product by Techno Veins (Japan)

TAKACHI

HYR SERIES HEAT-SINK RACK MOUNTING ENCLOSURE

Heat Resistant

Technical Data
Protection class: IP40

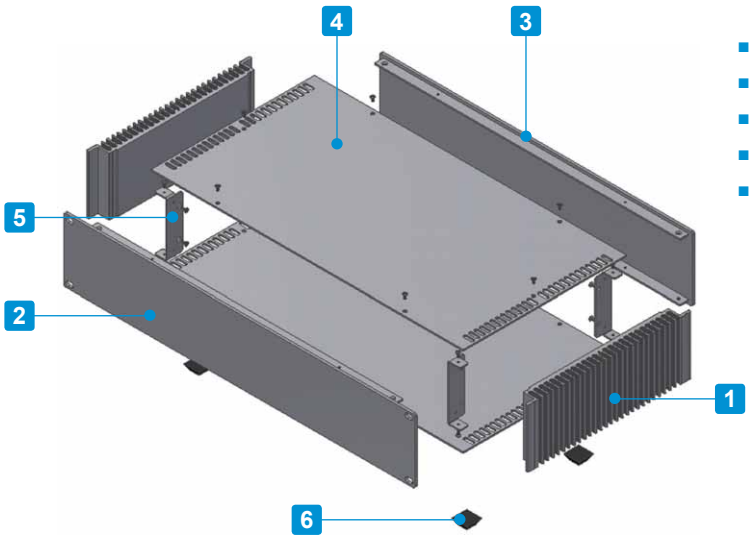

- 8 different sizes, each with 2 color types available for selection.
- Stylish and elegantly designed with a hairline finish.
- Excellent cooling performance with the heat-sink side plates.
- Tough and robust enclosure from using aluminium extrusion parts.
- Simple and easy to assemble construction.

Components

No.	Part name	Pcs	Material	Color / Finish
1	Heat-sink side plate	2	Extruded aluminium A6063S-T5	Silver • Black / Anodized
2	Front panel	1	Extruded aluminium A6063S-T5	Silver • Black / Hairline brushed & Anodized
3	Rear panel	1	Extruded aluminium A6063S-T5	Silver • Black / Hairline brushed & Anodized
4	Top • Bottom cover	2	Aluminium A1050P t=2.0	Silver • Black / Hairline brushed & Anodized
5	Corner support	4	Steel SPCC t=1.6	Trivalent chromate
6	Rubber feet	4	Polyurethane	Black
–	Screw	1 set	Steel M3	Nickel plated · Black trivalent chromate

Accessories (Optional parts)

Mounting plate HYC series
See page HYC • HYCL-1

L-bracket HYCL series
See page HYC • HYCL-1

TORX screw MR3-5Z series
See page HY • HYR • HYRH-2

HYR dimensions (outside view)

■ Drawings below are reference examples only.
DXF/DWG/PDF drawings available on our website.

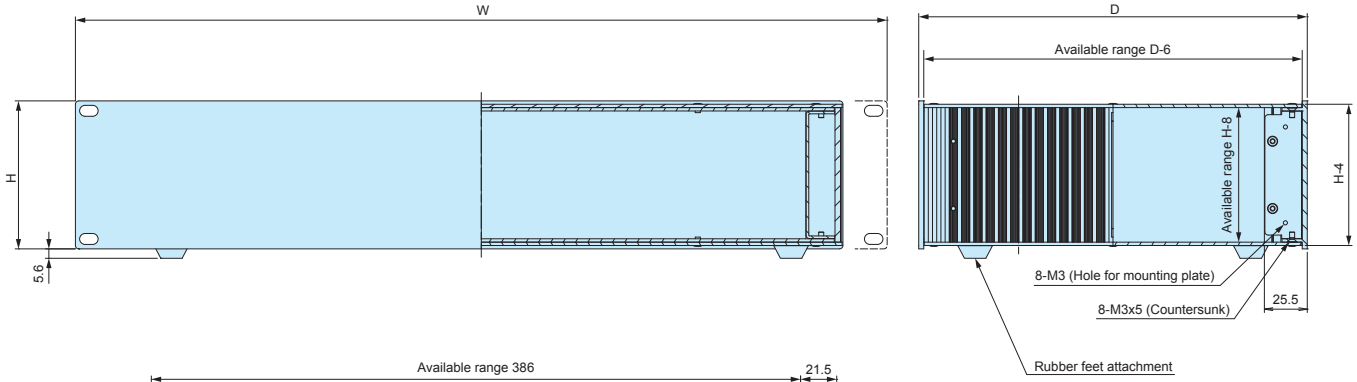

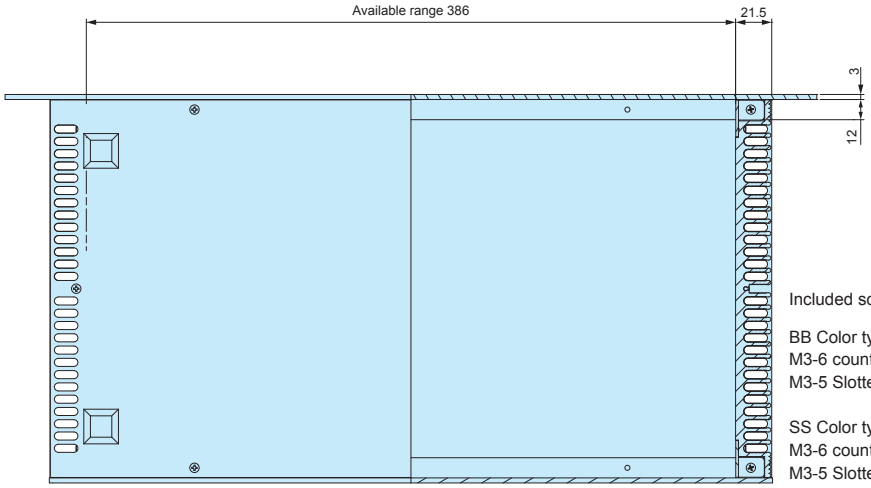

Included screws

BB Color type
M3-6 countersunk screw, black trivalent chromate x 16 pcs
M3-5 Slotted raised countersunk screw, black trivalent chromate x 12 pcs

SS Color type
M3-6 countersunk screw, nickel plated x 16 pcs
M3-5 Slotted raised countersunk screw, nickel plated x 12 pcs

Product no. / Dimensions

Product no.		W	H	D	Standard	Weight (kg)
● Silver	● Black					
HYR 44-43-23SS	HYR 44-43-23BB	482.6	44	231	EIA	1.9
HYR 44-43-33SS	HYR 44-43-33BB	482.6	44	330	EIA	2.6
HYR 88-43-23SS	HYR 88-43-23BB	482.6	88	231	EIA	2.8
HYR 88-43-33SS	HYR 88-43-33BB	482.6	88	330	EIA	3.7
HYR133-43-23SS	HYR133-43-23BB	482.6	132.5	231	EIA	3.6
HYR133-43-33SS	HYR133-43-33BB	482.6	132.5	330	EIA	4.7
HYR177-43-23SS	HYR177-43-23BB	482.6	177	231	EIA	4.5
HYR177-43-33SS	HYR177-43-33BB	482.6	177	330	EIA	5.9

TAKACHI

HYRH SERIES HEAT-SINK RACK MOUNTING ENCLOSURE with HANDLE

Heat Resistant

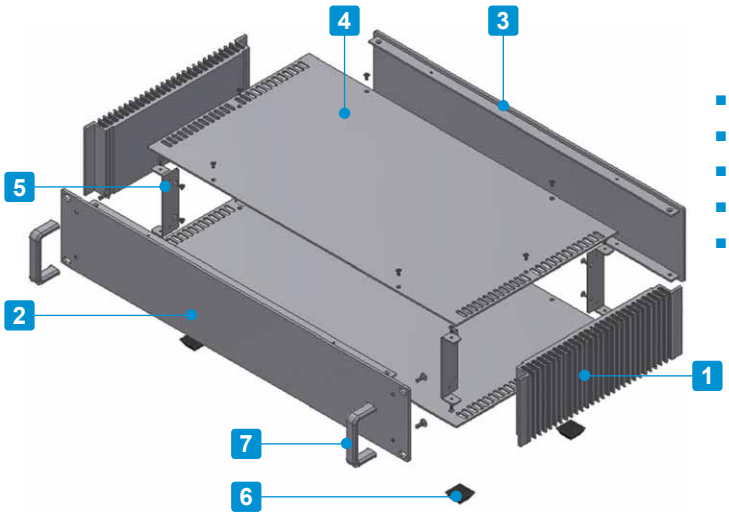

Technical Data
Protection class: IP40

- Equipped with handy rack mount / pull out handles.
- Available in 8 sizes, and 2 different colors.
- Excellent cooling performance with the heat-sink side plates.
- Tough and robust enclosure from using aluminium extrusion parts.
- Simple and easy to assemble construction.

Components

No.	Part name	Pcs	Material	Color / Finish
1	Heat-sink side plate	2	Extruded aluminium A6063S-T5	Silver • Black / Anodized
2	Front panel	1	Extruded aluminium A6063S-T5	Silver • Black / Hairline brushed & Anodized
3	Rear panel	1	Extruded aluminium A6063S-T5	Silver • Black / Hairline brushed & Anodized
4	Top • Bottom cover	2	Aluminium A1050P t=2.0	Silver • Black / Hairline brushed & Anodized
5	Corner support	4	Steel SPCC t=1.6	Trivalent chromate
6	Rubber feet	4	Polyurethane	Black
7	Handle	2	Extruded aluminium A6063S-T5	Silver • Black / Anodized
–	Screw	1 set	Steel	Nickel plated · Black trivalent chromate

Accessories (Optional parts)

Mounting plate HYC series
See page HYC • HYCL-1

L-bracket HYCL series
See page HYC • HYCL-1

TORX screw MR3-5Z series
See page HY • HYR • HYRH-2

HYRH dimensions (outside view)

■ Drawings below are reference examples only.
DXF/DWG/PDF drawings available on our website.

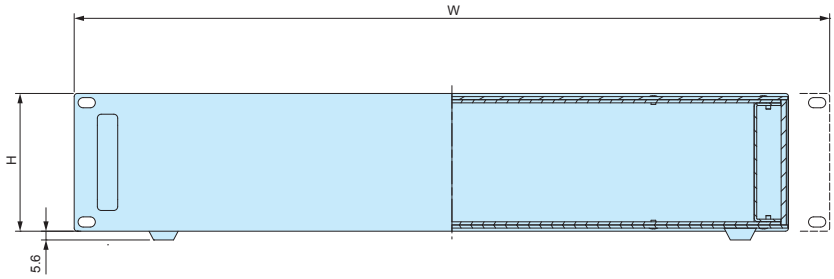

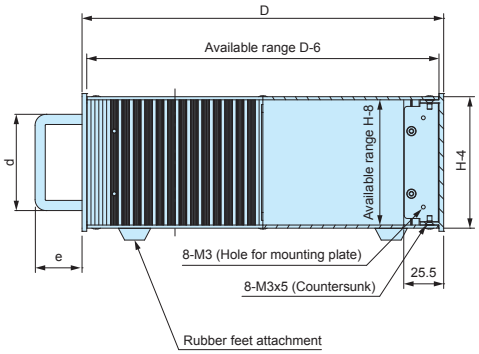

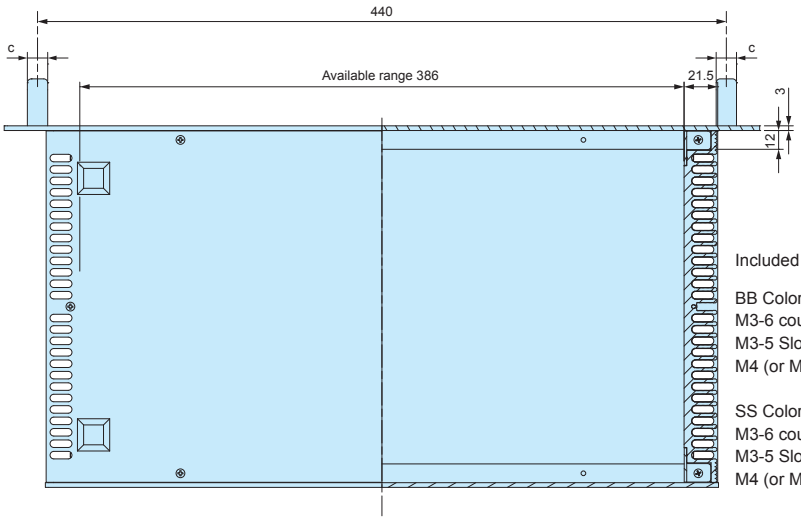

Included screws

BB Color type
M3-6 countersunk screw, black trivalent chromate x 16 pcs
M3-5 Slotted raised countersunk screw, black trivalent chromate x 12 pcs
M4 (or M5) countersunk screw, trivalent chromate x 4 pcs

SS Color type
M3-6 countersunk screw, nickel plated x 16 pcs
M3-5 Slotted raised countersunk screw, nickel plated x 12 pcs
M4 (or M5) countersunk screw, trivalent chromate x 4 pcs

Product no.		W	H	D	c	d	e	Standard	Weight (kg)
○ Silver	● Black								
HYRH 44-43-23SS	HYRH 44-43-23BB	482.6	44	231	12	41.0	40	EIA	2.0
HYRH 44-43-33SS	HYRH 44-43-33BB	482.6	44	330	12	41.0	40	EIA	2.6
HYRH 88-43-23SS	HYRH 88-43-23BB	482.6	88	231	13	61.5	30	EIA	2.8
HYRH 88-43-33SS	HYRH 88-43-33BB	482.6	88	330	13	61.5	30	EIA	3.7
HYRH133-43-23SS	HYRH133-43-23BB	482.6	132.5	231	13	106.5	30	EIA	3.6
HYRH133-43-33SS	HYRH133-43-33BB	482.6	132.5	330	13	106.5	30	EIA	4.8
HYRH177-43-23SS	HYRH177-43-23BB	482.6	177	231	13	126.5	30	EIA	4.6
HYRH177-43-33SS	HYRH177-43-33BB	482.6	177	330	13	126.5	30	EIA	5.9

HY dimensions (outside view)

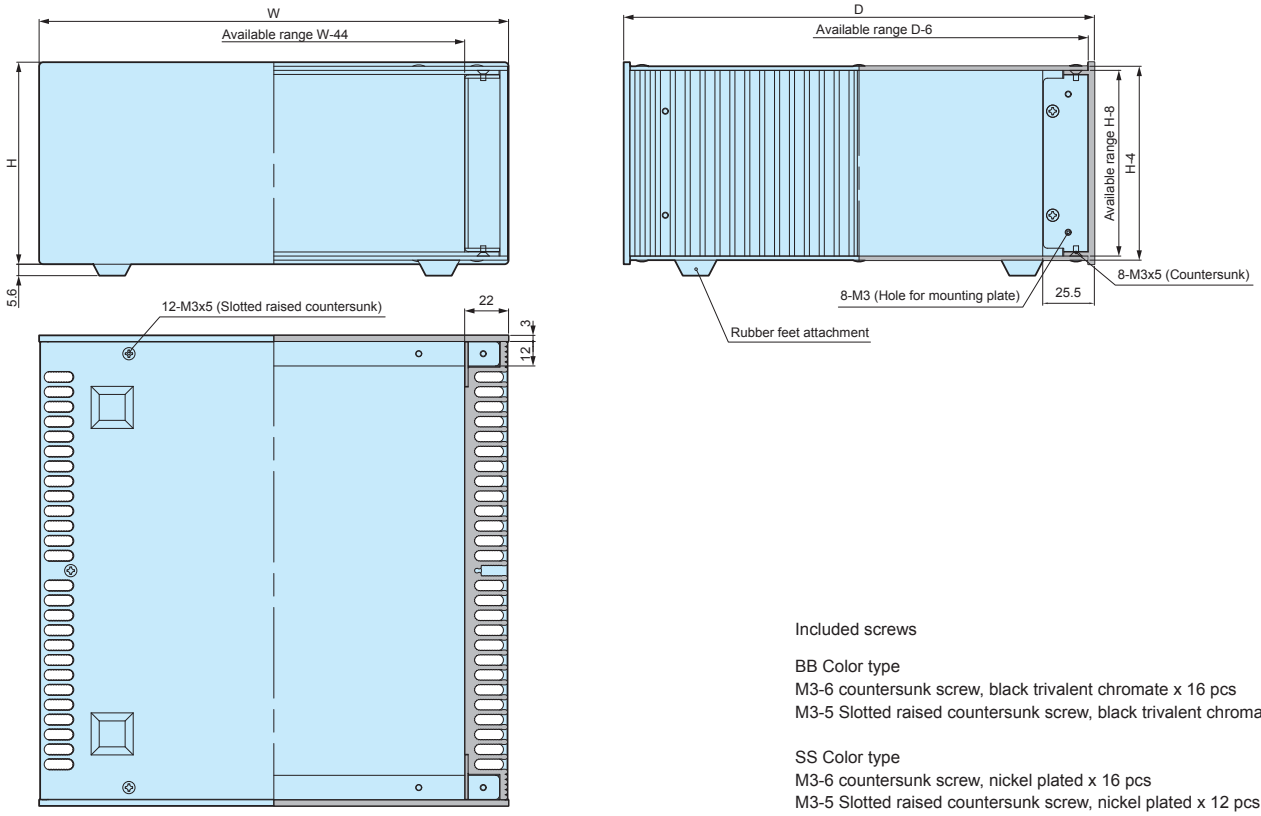

Included screws

BB Color type
M3-6 countersunk screw, black trivalent chromate x 16 pcs
M3-5 Slotted raised countersunk screw, black trivalent chromate x 12 pcs

SS Color type
M3-6 countersunk screw, nickel plated x 16 pcs
M3-5 Slotted raised countersunk screw, nickel plated x 12 pcs

Component Parts Drawings

HY • HYR • HYRH top / bottom cover

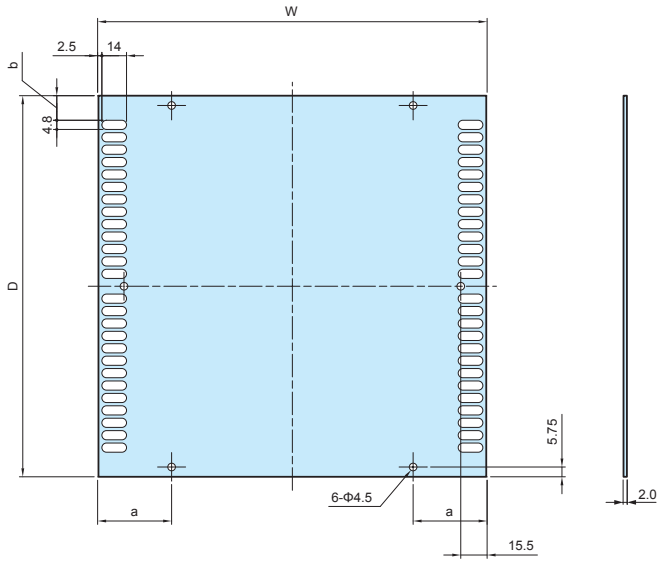

Color Type

Code	Material	Color / Finish
SS	Aluminium A1050P t = 2.0	Silver / Hairline brushed & Anodized
BB	Aluminium A1050P t = 2.0	Black / Hairline brushed & Anodized

Dimensions

Enclosure W x D	W	D	a	b
230 × 231	229	224.5	45.7	14.95
230 × 330	229	323.5	45.7	15.1
280 × 231	279	224.5	55.8	14.95
280 × 330	279	323.5	55.8	15.1
330 × 231	329	224.5	65.8	14.95
330 × 330	329	323.5	65.8	15.1
430 × 231	429	224.5	85.8	14.95
430 × 330	429	323.5	85.8	15.1

HY front / rear panels & HYR • HYRH rear panel

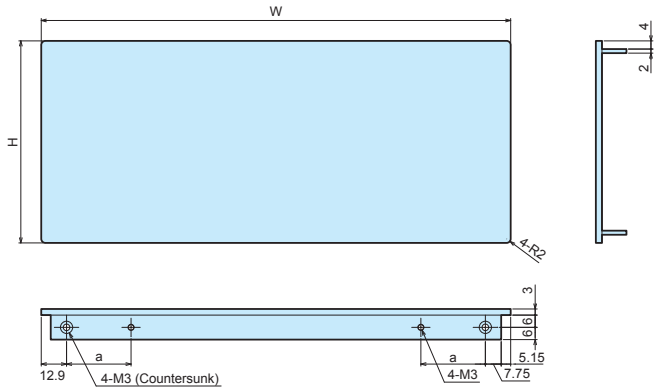

Color Type

Code	Material	Color / Finish
SS	Extruded aluminium A6063S-T5	Silver / Hairline brushed & Anodized
BB	Extruded aluminium A6063S-T5	Black / Hairline brushed & Anodized

Dimensions

Enclosure W	W	a	H(44)	H(70)	H(88)	H(99)	H(132.5)	H(149)	H(177)
230	230	33.3	44	70	88	99	132.5	149	177
280	280	43.4	44	70	88	99	132.5	149	177
330	330	53.4	44	70	88	99	132.5	149	177
430	430	73.4	44	70	88	99	132.5	149	177

HY • HYR • HYRH heat-sink side plate

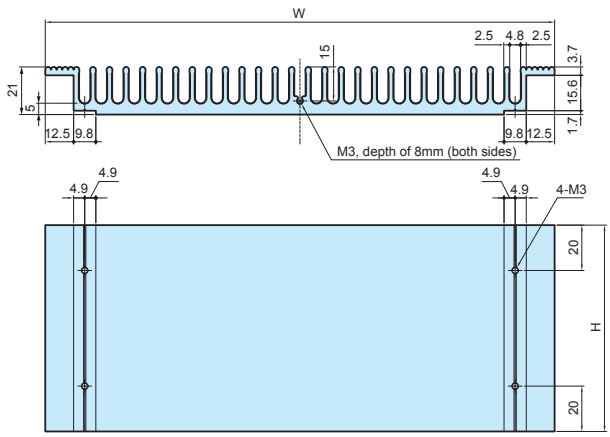

Color Type

Code	Material	Color / Finish
SS	Extruded aluminium A6063S-T5	Silver / Anodized
BB	Extruded aluminium A6063S-T5	Black / Anodized

Dimensions

Enclosure D x H	W	H	Thermal resistance (°C/W)
231 × 44	224.6	36	2.41
330 × 44	323.6	36	1.89
231 × 70	224.6	62	1.49
330 × 70	323.6	62	1.36
231 × 88	224.6	80	1.49
330 × 88	323.6	80	1.17
231 × 99	224.6	91	1.38
330 × 99	323.6	91	1.08
231 × 132.5	224.6	124.5	1.14
330 × 132.5	323.6	124.5	0.89
231 × 149	224.6	141	1.06
330 × 149	323.6	141	0.83
231 × 177	224.6	169	0.95
330 × 177	323.6	169	0.74

■ Thermal resistance calculation is based on the fins being perpendicular to the ground with temperature at 60°C.

HY • HYR • HYRH corner support

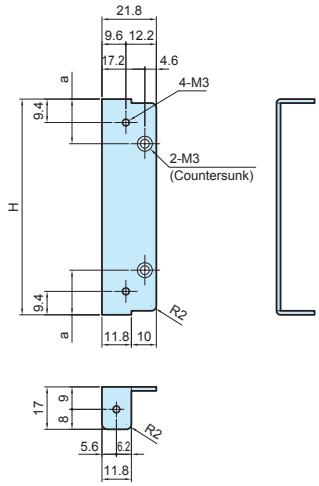

Part Information

Part name	Material	Finish
Corner support	Steel t=1.6	Trivalent chromate

Dimensions

Enclosure H	H	a
44	31.8	10.9
70	57.8	17.9
88	75.8	17.9
99	86.8	17.9
132.5	120.3	17.9
149	136.8	17.9
177	164.8	17.9

HY • HYR • HYRH rubber feet

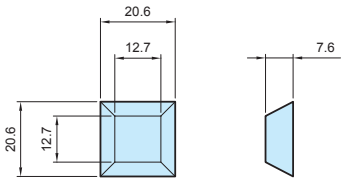

Part Information

Part name	Material	Color
Rubber feet	Polyurethane	Black

Accessories (Optional parts)

MR SERIES SLOTTED RAISED COUNTERSUNK TORX SCREW

- For use with top/bottom cover.
- Recommended for aesthetic purposes, or for tampering resistance.
- Requires the use of a specialized screwdriver.

Product no. / Dimensions

Product no.	M	L	TORX head no.	Material	Color / Finish	Pack of
MR3-5ZS	3	5	T10	Steel	Nickel plated	20
MR3-5ZB	3	5	T10	Steel	Black trivalent chromate	20

HYR front panel

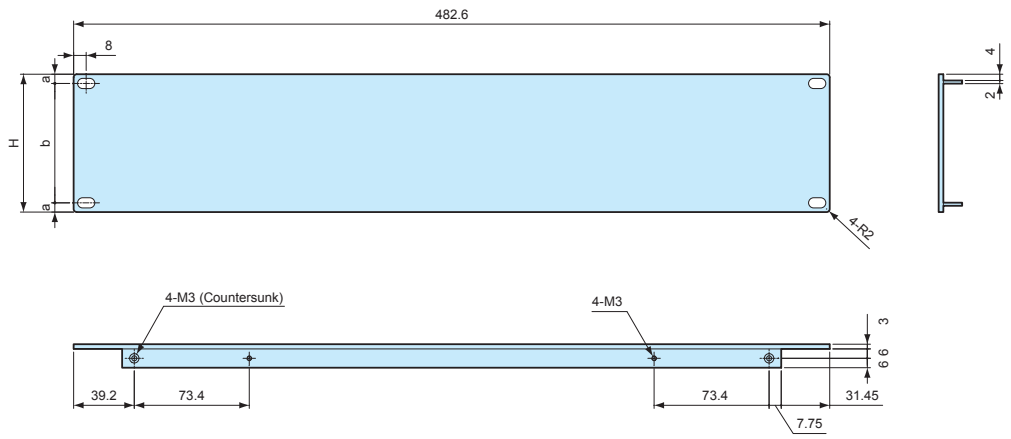

HYRH front panel

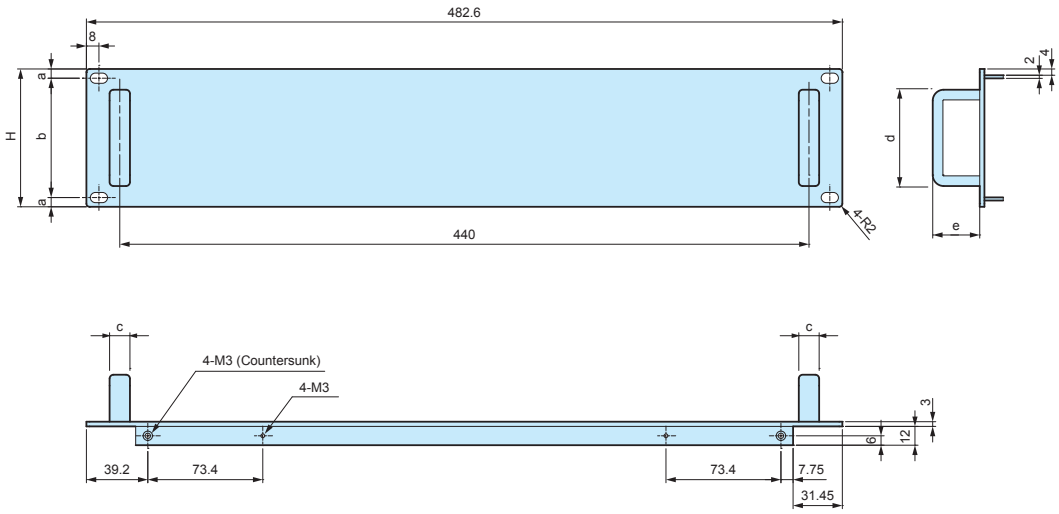

Color Type

Code	Material	Color / Finish
SS	Extruded aluminium A6063S-T5	Silver / Hairline brushed & Anodized
BB	Extruded aluminium A6063S-T5	Black / Hairline brushed & Anodized

Product no.	H	a	b	c	d	e
HYR/HYRH 44-43-23□	44	6.1	31.8	12	41	40
HYR/HYRH 44-43-33□	44	6.1	31.8	12	41	40
HYR/HYRH 88-43-23□	88	5.9	76.2	13	61.5	30
HYR/HYRH 88-43-33□	88	5.9	76.2	13	61.5	30
HYR/HYRH133-43-23□	132.5	37.7	57.1	13	106.5	30
HYR/HYRH133-43-33□	132.5	37.7	57.1	13	106.5	30
HYR/HYRH177-43-23□	177	37.7	101.6	13	126.5	30
HYR/HYRH177-43-33□	177	37.7	101.6	13	126.5	30

HIT SERIES HEAT-SINK ALUMINIUM CASE

Heat Resistant

- Heat dissipation and cooling via the utilization of extruded aluminium heat-sink side plates.
- Rounded corners gives it an elegant feel.
- Aluminium extrusion parts provides high structural durability.
- Suitable for use as small-type fanless PC, digital audio equipment, and so on.
- Available in both Silver and Black color types.

- Optional aluminium isolation feet, AFS and AFM series are available. See page AFS•AFM-1 ~ AFS•AFM-2 for more details.

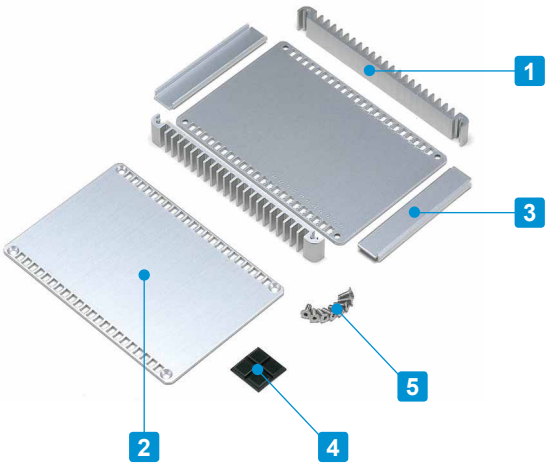

Application example

Included screws
Enclosure (Silver) M3-8 Hexagonal countersunk : Stainless steel : Unfinished x 8 pcs
Enclosure (Black) M3-8 Hexagonal countersunk : Steel : Black trivalent chromate x 8 pcs
※Hexagonal wrench included

Components

No.	Part name	Pcs	Material	Color / Finish
1	Heat-sink side plate	2	Extruded aluminium A6063S-T5	Silver • Black / Anodized
2	Top • Bottom cover	2	Aluminium A1050P t=2.0	Silver • Black / Hairline brushed & Anodized
3	Front • Rear panel	2	Aluminium A1050P t=1.5	Silver • Black / Hairline brushed & Anodized
4	Rubber feet	1 set	Polyurethane	Black
5	Screw	8	Stailess steel (SS color type) Steel (BB color type)	Unfinished Black trivalent chromate (Steel)

HIT dimensions

■ Drawings below are reference examples only.
DXF/DWG/PDF drawings available on our website.

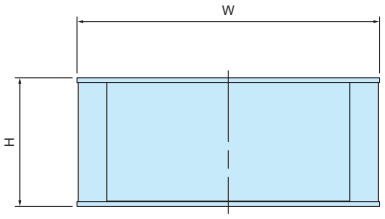

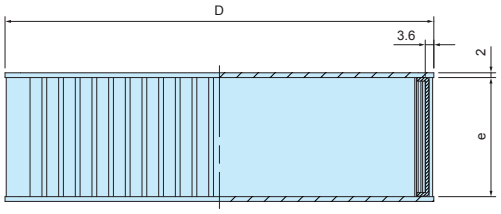

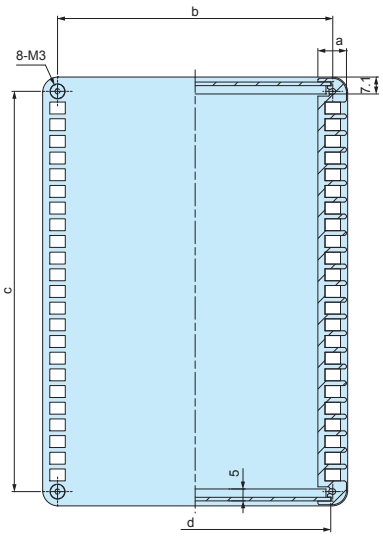

APPLICATION EXAMPLE

FIBER OPTICS EXTENSION UNIT

Product by Sanritz Automation (Japan)

AUDIO POWER SUPPLY for MacBook

Product by AY-densi (Japan)

Product no. / Dimensions

■ Thermal resistance calculation is based on the fins being perpendicular to the ground with temperature at 60°C.

Product no.		W	H	D	a	b	c	d	e	※Thermal resistance rate (°C/W)	Weight (g)
● Silver	● Black										
HIT 9-2-13SS	HIT 9-2-13BB	89	20	130	8	81	118.6	78.8	16	9.14	183
HIT 9-4-13SS	HIT 9-4-13BB	89	40	130	8	81	118.6	78.8	36	5.6	255
HIT13-3-13SS	HIT13-3-13BB	130	30	130	8	122	118.6	119.8	26	6.82	289
HIT13-5-13SS	HIT13-5-13BB	130	50	130	8	122	118.6	119.8	46	4.83	370
HIT18-4-13SS	HIT18-4-13BB	180	40	130	8	172	118.6	169.8	36	5.6	414
HIT18-6-13SS	HIT18-6-13BB	180	60	130	8	172	118.6	169.8	56	4.29	503
HIT13-3-18SS	HIT13-3-18BB	128	30	180	12	115.5	168	113.8	26	4.38	411
HIT13-5-18SS	HIT13-5-18BB	128	50	180	12	115.5	168	113.8	46	3.1	535
HIT17-4-18SS	HIT17-4-18BB	174	40	180	12	161.5	168	159.8	36	3.6	578
HIT17-6-18SS	HIT17-6-18BB	174	60	180	12	161.5	168	159.8	56	2.76	719
HIT23-5-18SS	HIT23-5-18BB	228	50	180	12	215.5	168	213.8	46	3.1	772
HIT23-7-18SS	HIT23-7-18BB	228	70	180	12	215.5	168	213.8	66	2.5	928

HEN SERIES HEAT-SINK ALUMINIUM CASE

Heat Resistant

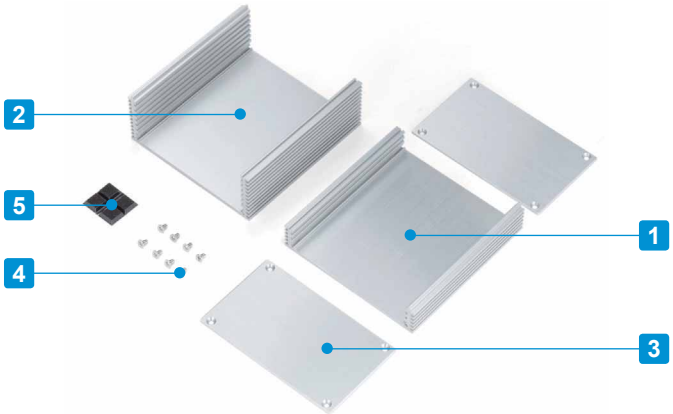

- Stylish design coupled with hairline brushed finish makes for a luxurious high-end case.
- Heat dissipation and cooling via the utilization of extruded aluminium heat-sink top/bottom cover.
- Available in 18 sizes.
- Sturdy extruded case construction.

Included screws
Enclosure (Silver) M3-6 countersunk : Steel : Nickel plated x 8 pcs
Enclosure (Black) M3-6 countersunk : Steel : Black trivalent chromate x 8 pcs

Components

No.	Part name	Pcs	Material	Color / Finish
1	Top cover	1	Extruded aluminium A6063S-T5	Silver • Black / Hairline brushed & Anodized
2	Bottom cover	1	Extruded aluminium A6063S-T5	Silver • Black / Hairline brushed & Anodized
3	Front • Rear panel	2	Aluminium A1050P t=2.0	Silver • Black / Hairline brushed & Anodized
4	Screw	8	Steel countersunk M3-6	Nickel plated • Black trivalent chromate
5	Rubber feet	4	Polyurethane	Black

※HL ＝ Hairline brushed

Accessories (Optional parts)

TORX screw MR-2S
See page EM•MR-1

Aluminium isolation feet AFS • AFM series
See page AFS•AFM-1 ～ AFS•AFM-2

HEN dimensions

■ Drawings below are reference examples only.
DXF/DWG/PDF drawings available on our website.

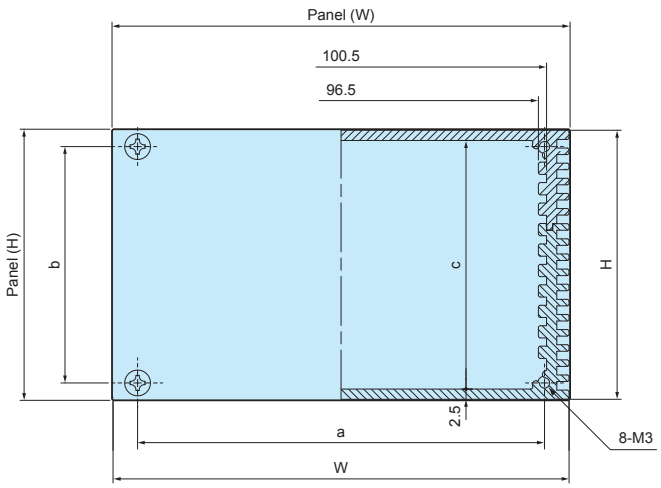

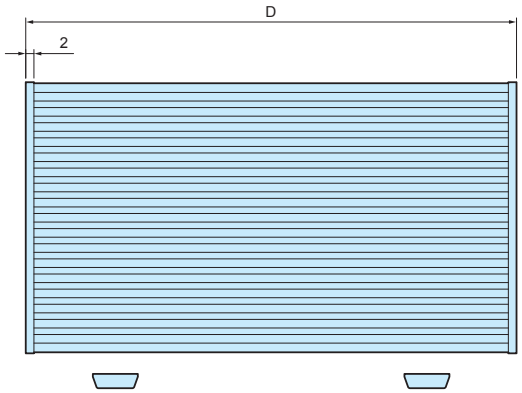

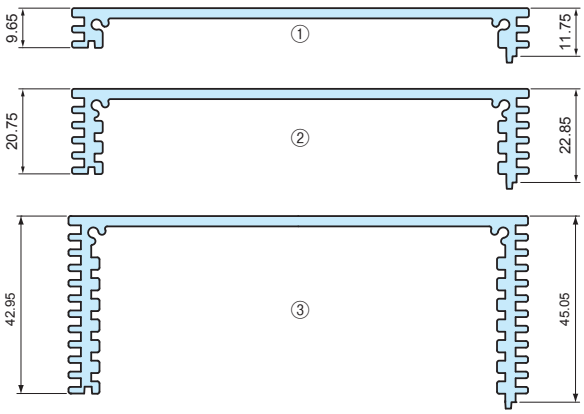

Cover Type

Cover	Cover length (D-4)	※Thermal resistance rate (°C/W)
①	56	6.7
	116	3.6
	196	2.1
②	56	5
	116	2.6
	196	1.5
③	56	3.3
	116	1.7
	196	0.93

■ Thermal resistance calculation is based on the fins being perpendicular to the ground with temperature at 60°C.

Product no. / Dimensions

Product no.		W	H	D	Panel (W)	Panel (H)	a	b	c	Cover combination	Weight (g)
● Silver	● Black										
HEN110206S	HEN110206B	111.2	21.4	60	112	21.9	99.2	13.4	16.4	①×2	143
HEN110212S	HEN110212B	111.2	21.4	120	112	21.9	99.2	13.4	16.4		258
HEN110220S	HEN110220B	111.2	21.4	200	112	21.9	99.2	13.4	16.4		411
HEN110306S	HEN110306B	111.2	32.5	60	112	33.0	99.2	24.5	27.5	①×1 ②×1	179
HEN110312S	HEN110312B	111.2	32.5	120	112	33.0	99.2	24.5	27.5		311
HEN110320S	HEN110320B	111.2	32.5	200	112	33.0	99.2	24.5	27.5		488
HEN110406S	HEN110406B	111.2	43.6	60	112	44.1	99.2	35.6	38.6	②×2	215
HEN110412S	HEN110412B	111.2	43.6	120	112	44.1	99.2	35.6	38.6		365
HEN110420S	HEN110420B	111.2	43.6	200	112	44.1	99.2	35.6	38.6		565
HEN110506S	HEN110506B	111.2	54.7	60	112	55.2	99.2	46.7	49.7	①×1 ③×1	250
HEN110512S	HEN110512B	111.2	54.7	120	112	55.2	99.2	46.7	49.7		417
HEN110520S	HEN110520B	111.2	54.7	200	112	55.2	99.2	46.7	49.7		640
HEN110606S	HEN110606B	111.2	65.8	60	112	66.3	99.2	57.8	60.8	②×1 ③×1	286
HEN110612S	HEN110612B	111.2	65.8	120	112	66.3	99.2	57.8	60.8		471
HEN110620S	HEN110620B	111.2	65.8	200	112	66.3	99.2	57.8	60.8		717
HEN110806S	HEN110806B	111.2	88.0	60	112	88.5	99.2	80.8	83.0	③×2	358
HEN110812S	HEN110812B	111.2	88.0	120	112	88.5	99.2	80.8	83.0		577
HEN110820S	HEN110820B	111.2	88.0	200	112	88.5	99.2	80.8	83.0		869

APPLICATION EXAMPLE AUDIO POWER SUPPLY

Product by AY-densi (Japan)

HS SERIES HEAT-SINK ALUMINIUM CASE

Heat Resistant

- Aluminium case with heat dissipating heat-sink cover for superior cooling effect.
- Recommended for use with equipment requiring heat dissipation.
- Manufactured with mounting flange for easy attachment onto walls and other surfaces.

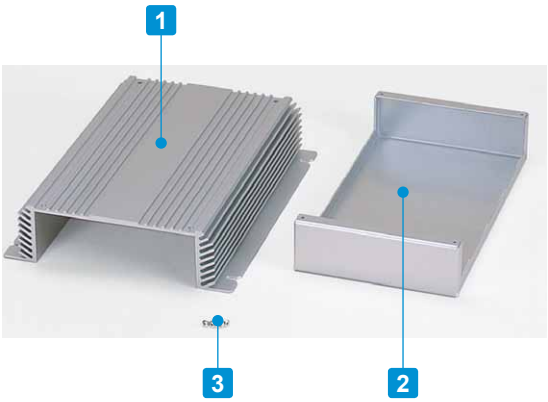

APPLICATION EXAMPLE

HIGH-END PERFORMANCE AUDIO AMPLIFER

Product by: IC Technologies (Australia)

Components

No.	Part name	Pcs	Material	Color / Finish
1	Heat-sink cover	1	Extruded aluminium A6063S-T5	Silver • Black / Anodized
2	Bottom chassis	1	Aluminium A1050P t=1.5	Silver • Black / Anodized
3	Screw	4	Steel M3-5	Nickel plated • Black trivalent chromate

HS dimensions

■ Drawings below are reference examples only.
DXF/DWG/PDF drawings available on our website.

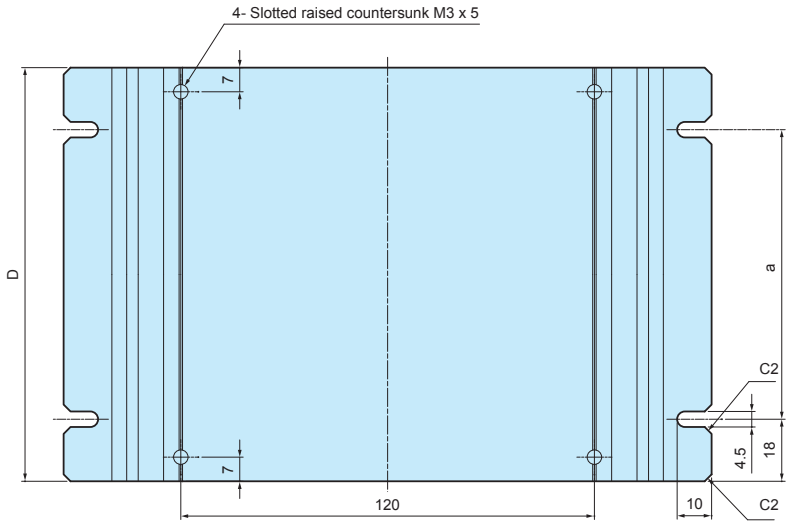

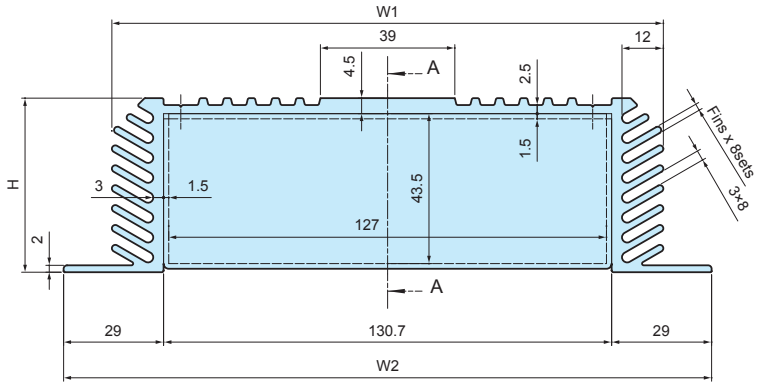

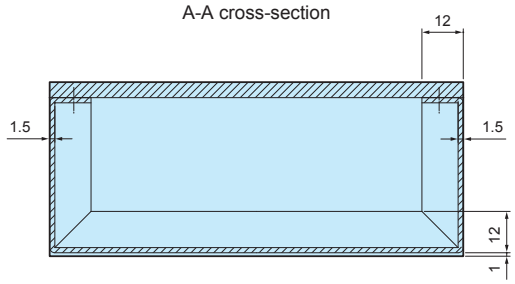

Product no. / Dimensions

Product no.		W1	W2	H	D	a	Thermal resistance (°C / W)	Weight (kg)
● Silver	● Black							
HS16-5-16S	~~HS16-5-16B~~	160	188.7	50.5	160	124	1.1	0.72
HS16-5-23S	HS16-5-23B	160	188.7	50.5	230	194	0.83	1.0
HS16-5-30S	HS16-5-30B	160	188.7	50.5	300	264	0.69	1.29

※Cross out products are discontinued. ■ Thermal resistance calculation is based on the fins being perpendicular to the ground with temperature at 60°C.

Accessories (Optional parts)

MR SERIES SLOTTED RAISED COUNTERSUNK TORX SCREW

- For use with the heat-sink cover.
- Recommended for aesthetic purposes, or for tampering resistance.
- Requires the use of a specialized screwdriver.

Product no. / Dimensions

Product no.	M	L	TORX head no.	Material	Color / Finish	Pack of
MR3-5ZS	3	5	T10	Steel	Nickel plated	20
MR3-5ZB	3	5	T10	Steel	Black trivalent chromate	20

UC series UNIVERSAL ALUMINIUM CASE

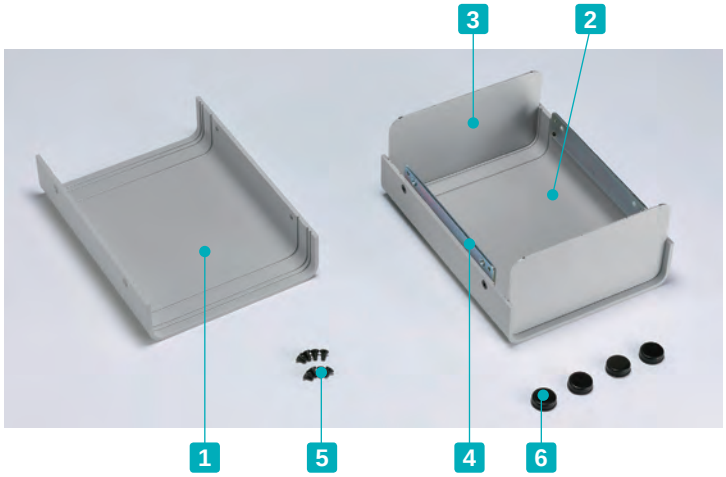

- Simple structure and tough case with extruded aluminium covers
- 36 sizes and 2 different colors for a total of 72 different combinations.
- 2 or 3 grooves available on top/bottom covers for adjusting front/rear panel positions or PCB insertion.
- Optional mounting plate, mounting bracket, panel retainer, and TORX screw are available.
- Custom length is available

Components

No.	Part name	Pcs	Material	Color / Finish
1	Top cover	1	Extruded aluminium A6063S-T5	Light gray • Black / Painted
2	Bottom cover	1	Extruded aluminium A6063S-T5	Light gray • Black / Painted
3	Panel	2	Aluminium A1100P t=1.5	Light gray • Black / Painted
4	Joint plate	2	Steel SPCC t=2.0	Trivalent chromate
5	Screw (M3 flat head)	12	Steel	Black trivalent chromate
6	Rubber feet	4	Synthetic rubber	Black

- Panels are covered with a protective film on one side.

Accessories (Optional parts)

Mounting plate UCC series
See page 261

Mounting bracket UCK-P series
See page 262

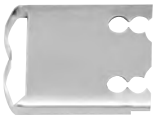

Panel retainer UCF-26
See page 262

TORX screw MR-1
See page 123

Aluminium isolation feet AFS • AFM series
See page 293 ~ 294

UC dimensions

■ DXF/DWG/PDF/STP drawings available on our website.

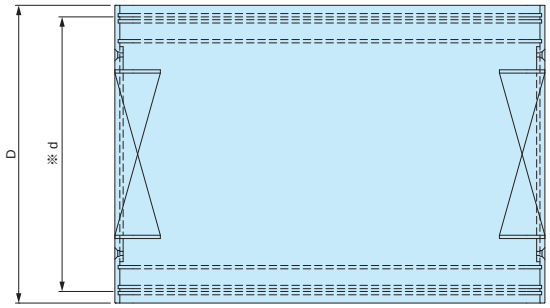

*d dimension varies depending on panel mount position. Dimensions listed are based on outermost mount position.

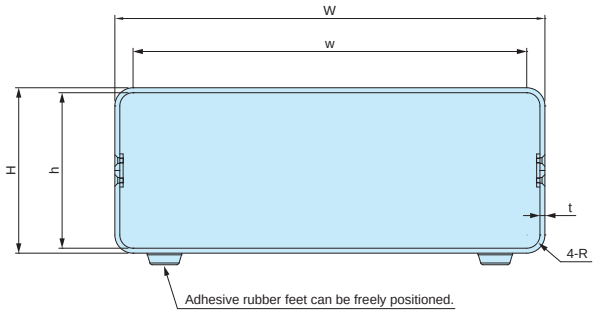

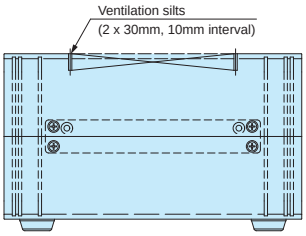

Color Type

● GG

Cover	Light gray
Panel	Light gray

● BB

Cover	Black
Panel	Black

Product no. / Dimensions

■ Please suffix color code at the end of the product number.
■ See below chart for ventilation slits availability.

Product no.	External dimensions			Internal dimensions			R	t	Ventilation slits	Weight (kg)
	W	H	D	w	h	d				
UC 6- 3- 8□	60	35	80	50	31	72	3	2	–	0.12
UC 7- 3-10□	75	30	100	65	26	92	3	2	–	0.16
UC 7- 8-14□	75	85	140	60	80	130	5	2.5	–	0.37
UC 8- 3- 6□	80	30	60	70	26	52	3	2	–	0.10
UC 9- 5-12□	90	50	120	75	45	112	5	2.5	–	0.29
UC10- 4-14□	100	40	140	85	35	130	5	2.5	–	0.32
UC10-11-18□	100	110	180	78	104	166	8	3	–	0.72
UC11- 3- 8□	110	30	80	100	26	72	3	2	–	0.17
UC11- 5- 8□	110	50	80	100	46	72	3	2	–	0.20
UC12- 7-16□	120	70	160	98	64	146	8	3	–	0.56
UC12-14-22□	120	140	220	98	134	206	8	3	○	1.08
UC13- 4-18□	130	40	180	108	34	166	8	3	–	0.56
UC14- 4-10□	140	40	100	130	36	92	3	2	–	0.27
UC14- 6-10□	140	60	100	130	56	92	3	2	–	0.31
UC15- 8-20□	150	80	200	128	74	186	8	3	○	0.86
UC15-10-12□	150	100	120	135	95	112	5	2.5	–	0.53
UC15-18-28□	150	180	280	128	174	266	8	3	○	1.74
UC16- 5-22□	165	50	220	143	44	206	8	3	○	0.84
UC17- 5-12□	170	50	120	155	45	112	5	2.5	–	0.45
UC17- 7-12□	170	70	120	155	65	112	5	2.5	–	0.51
UC18-10-24□	180	100	240	158	94	226	8	3	○	1.26
UC18-21-34□	180	210	340	157.6	203.6	326	8	3.2	○	2.63
UC20- 5-14□	200	50	140	185	45	130	5	2.5	–	0.56
UC20- 8-14□	200	80	140	185	75	130	5	2.5	–	0.67
UC20-12-16□	200	120	160	178	114	146	8	3	–	0.82
UC22-12-26□	220	120	260	198	114	246	8	3	○	1.70
UC24-14-34□	240	140	340	217.6	133.6	326	8	3.2	○	2.54
UC26- 5-18□	260	50	180	238	44	166	8	3	○	1.02
UC26- 7-20□	260	70	200	238	64	186	8	3	○	1.23
UC26-10-18□	260	100	180	238	94	166	8	3	○	1.26
UC32- 5-22□	320	50	220	298	44	206	8	3	○	1.45
UC32- 8-24□	320	80	240	298	74	226	8	3	○	1.76
UC32-12-22□	320	120	220	298	114	206	8	3	○	1.88
UC35-13-26□	350	130	260	328	124	246	8	3	○	2.45
UC43- 5-28□	430	50	280	408	44	266	8	3	○	2.37
UC43-14-28□	430	140	280	408	134	266	8	3	○	3.05

UCC series MOUNTING PLATE for UC

■ DXF/DWG/PDF drawings available on our website.

Type A

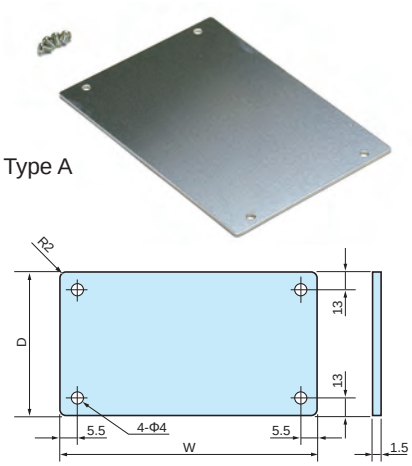

Type B

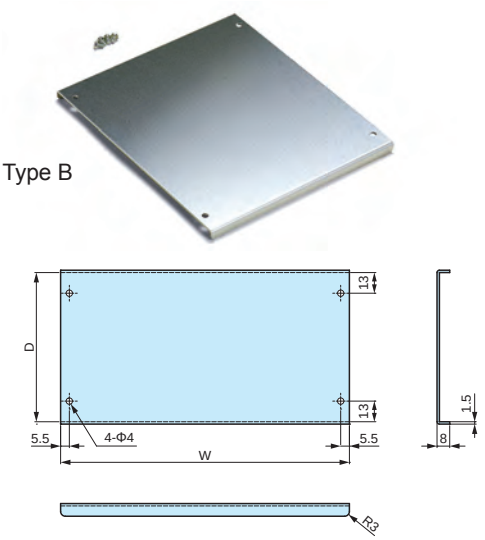

Type C

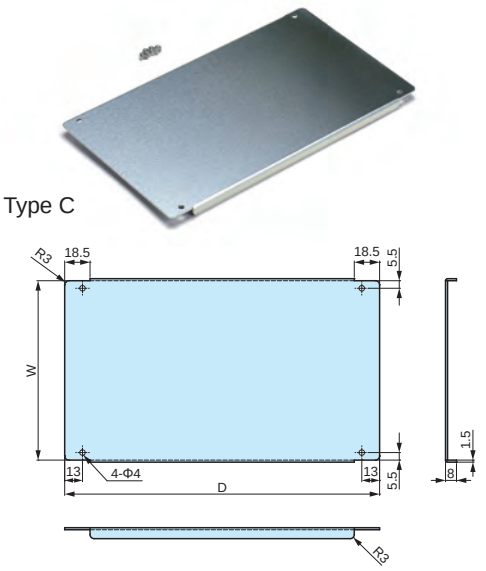

Components

Part name	Pcs	Material	Color / Finish
Mounting plate	1	Aluminium A1050P t=1.5	Unfinished
Screw	4	Steel M3-5	Trivalent chromate

Product no. / Dimensions (Type A)

Product no.	Suitable models	W	D
UCC 6- 8	UC 6- 3- 8	43	58
UCC 7-10	UC 7- 3-10	58	78
UCC 8- 6	UC 8- 3- 6	63	38
UCC11- 8	UC 11- 3- 8	93	58
	UC 11- 5- 8		
UCC 9-12	UC 9- 5-12	72	94
UCC10-14	UC 10- 4-14	82	94
UCC12-16	UC 12- 7-16	101	110
UCC13-18	UC 13- 4-18	111	130
UCC15-20	UC 15- 8-20	131	150
	UCG15- 9-20		
UCC14-10	UC 14- 4-10	123	78
	UC 14- 6-10		
UCC15-12	UC 15-10-12	132	94
UCC17-12	UC 17- 5-12	152	94
	UC 17- 7-12		
UCC 7-14	UC 7- 8-14	57	94
UCC10-18	UC 10-11-18	81	130
UCC12-22	UC 12-14-22	101	170

Product no. / Dimensions (Type B)

Product no.	Suitable models	W	D
UCC16-22	UC 16- 5-22	146	170
UCC18-24	UC 18-10-24	161	190
	UCG18-10-24		
UCC20-14	UC 20- 5-14	182	94
	UC 20- 8-14		
	UCG20- 9-14		
UCC22-26	UC 22-12-26	201	210
UCC20-16	UC 20-12-16	181	110
UCC26-18	UC 26- 5-18	241	130
	UC 26-10-18		
	UCG26-10-18		
UCC26-20	UC 26- 7-20	241	150
UCC32-22	UC 32- 5-22	301	170
	UC 32-12-22		
	UCG32-12-22		
UCC32-24	UC 32- 8-24	301	190
UCC35-26	UC 35-13-26	331	210
UCC43-28	UC 43- 5-28	411	230
	UC 43-14-28		

Product no. / Dimensions (Type C)

Product no.	Suitable models	W	D
UCC15-28	UC 15-18-28	131	230
UCC18-34	UC 18-21-34	160.6	290
UCC24-34	UC 24-14-34	220.6	290

UCK-P series MOUNTING BRACKET for UC

Components

Product name	Material	Finish	Pack of
Mounting bracket	Steel SPCC t=1.6	Trivalent chromate	4

Product no. / Dimensions

Product no.	Type	H1	C	C1	C2	Pack of
UCK-P 13	A	13	3	—	—	4
UCK-P 17	A	17	7	—	—	4
UCK-P 27	B	27	12	17	—	4
UCK-P 42	C	42	22	27	32	4
UCK-P 57	C	57	37	42	47	4
UCK-P 72	C	72	52	57	62	4
UCK-P 87	C	87	67	72	77	4
UCK-P102	C	102	82	87	92	4

■ DXF/DWG/PDF drawings available on our website.

UCK-P assembly drawings

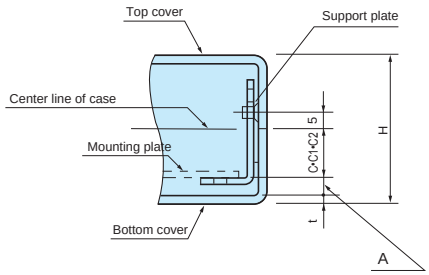

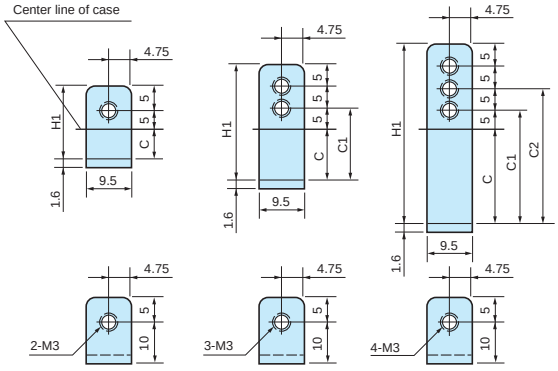

Type A Type B Type C

Bracket matching chart / A dimension

Product no.	Bracket no.	A		
UC 6- 3- 8	UCK-P 13	12.5		
	UCK-P 17	8.5		
UC 7- 3-10	UCK-P 13	10		
	UCK-P 17	6		
UC 9- 5-12	UCK-P 17	15.5		
	UCK-P 27	10.5	5.5	
UC 10- 4-14	UCK-P 13	14.5		
	UCK-P 17	10.5		
	UCK-P 27	5.5		
UC 12- 7-16	UCK-P 27	15		
	UCK-P 42	10		
UC 13- 4-18	UCK-P 13	14		
	UCK-P 17	10		
UC 15- 8-20	UCK-P 42	15	10	5
UC 16- 5-22	UCK-P 13	19		
	UCK-P 17	15		
	UCK-P 27	10		
UC 24-14-34	UCK-P 57	19.8		
	UCK-P 72	14.8	9.8	
UC 8- 3- 6	UCK-P 13	10		
	UCK-P 17	6		
UC 11- 3- 8	UCK-P 13	10		
	UCK-P 17	6		
UC 11- 5- 8	UCK-P 17	16		
	UCK-P 27	11	6	

Product no.	Bracket no.	A		
UC 14- 4-10	UCK-P 13	15		
	UCK-P 17	11		
	UCK-P 27	6		
UC 14- 6-10	UCK-P 27	16	11	
	UCK-P 42	6		
UC 15- 9-20	UCK-P 42	10		
	UCK-P 57			
UC 15-10-12	UCK-P 42	20.5	15.5	
	UCK-P 57	10.5	5.5	
UC 17- 5-12	UCK-P 17	15.5		
	UCK-P 27	10.5	5.5	
UC 17- 7-12	UCK-P 27	15.5		
	UCK-P 42	10.5	5.5	
UC 20- 5-14	UCK-P 13	19.5		
	UCK-P 17	15.5		
	UCK-P 27	10.5	5.5	
UC 20- 8-14	UCK-P 27	20.5		
	UCK-P 42	15.5	10.5	
UCG 20- 9-14	UCK-P 42	5		
	UCK-P 57			
UC 20-12-16	UCK-P 57	20	15	10
UC 26- 5-18	UCK-P 13	19		
	UCK-P 17	15		
	UCK-P 27	10		

Product no.	Bracket no.	A		
UC 26-10-18	UCK-P 42	20	15	
UCG 26-10-18	UCK-P 57	10		
UCG 26- 7-20	UCK-P 27	15		
	UCK-P 42	10		
UC 18-10-24	UCK-P 42	20	15	
UCG 18-10-24	UCK-P 57	10		
UC 22-12-26	UCK-P 57	20	15	10
UC 32- 5-22	UCK-P 13	19		
	UCK-P 17	15		
	UCK-P 27	10		
UC 32-12-22 UCG 32-12-22	UCK-P 57	20	15	10
UC 32- 8-24	UCK-P 42	15	10	5
UC 35-13-26	UCK-P 57	25	20	15
	UCK-P 72	10	5	
UC 43- 5-28	UCK-P 13	19		
	UCK-P 17	15		
	UCK-P 27	10		
UC 43-14-28	UCK-P 57	20		
	UCK-P 72	15	10	
UC 7- 8-14	UCK-P 42	18	13	8
UC 10-11-18	UCK-P 57	15	10	5
UC 12-14-22	UCK-P 72	15	10	5
UC 15-18-28	UCK-P 87	20	15	10
UC 18-21-34	UCK-P102	19.8	14.8	9.8

UCF-26 PANEL RETAINER for UC

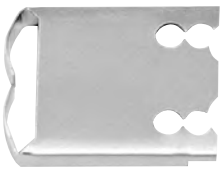

UCF-26 drawings

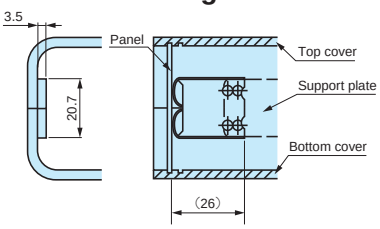

■ DXF/DWG/PDF drawings available on our website.

Product no.

Product no.	Material	Finish	Pack of
UCF-26	Stainless steel t=0.3	Unfinished	2

■ Not applicable for use on 60, 80, 100 and 120 "D" dimension cases.

UCG series UNIVERSAL ALUMINIUM CASE with CORNER GUARD

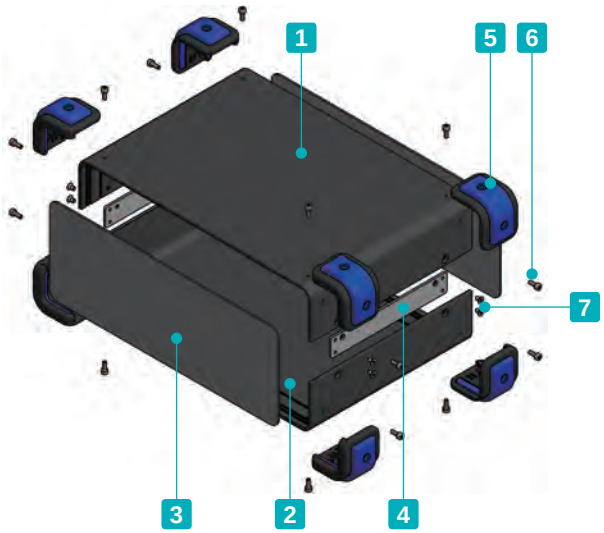

- Aluminium case equipped with shockproof and anti-slip corner guards.
- Available in 8 sizes and 5 different corner guard color variations.
- Custom sizes available.

Included screws
Corner guard screw - M3-8 Hexagonal x 16 pcs
Case screw - M3 Hexagonal flat head x 12 pcs
※2 Hexagonal wrenches included.
(The larger for corner guard screw, the smaller for case screw)

Components

No.	Part name	Pcs	Material	Color / Finish
1	Top cover	1	Extruded aluminium A6063S-T5	Black / Painted
2	Bottom cover	1	Extruded aluminium A6063S-T5	Black / Painted
3	Panel	2	Aluminium A1100P t=1.5	Black / Painted
4	Joint plate	2	Steel SPCC t=2.0	Trivalent chromate
5	Corner guard	8	PP + Silicone	Black • Emerald • Gray • Navy • Red
6	Corner guard screw	16	Steel	Trivalent chromate
7	Case screw	12	Steel	Trivalent chromate

- Panels are covered with a protective film on one side.

Color Type

Code	BB Black / Black	BE Black / Emerald	BG Black / Gray	BN Black / Navy	BR Black / Red
Color					

UCG dimensions

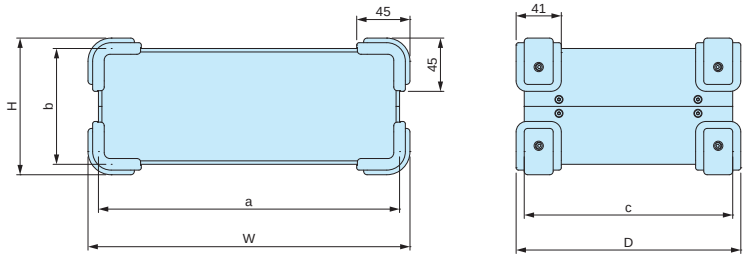

■ DXF/DWG/PDF/STP drawings available on our website.

Accessories (Optional parts)

Mounting plate UCC series
See page 261

Elastomer handle FM200 series
See website

Product no. / Dimensions

■ Please suffix color code at the end of the product number.

Product no.	W	H	D	a	b	c	Standard Compatible Mounting Plate	Weight (kg)
UCG15- 9-20□□	168	108	214	150	90	200	YES	1.14
UCG18-10-24□□	198	118	254	180	100	240	YES	1.44
UCG18-18-28□□	198	198	294	180	180	280	N/A	2.23
UCG20- 9-14□□	218	108	154	200	90	140	YES	1.13
UCG22-12-16□□	238	138	174	220	120	160	N/A	1.28
UCG26-10-18□□	278	118	194	260	100	180	YES	1.96
UCG32-12-22□□	338	138	234	320	120	220	YES	2.13
UCG38-15-26□□	398	168	274	380	150	260	N/A	3.19

■ Mounting plate can be custom ordered.

Accessories (Optional parts)

UG-1 CORNER GUARD for UC • UCG

Application example

- Corner guard parts for UC • UCG series.
- M3 thread holes are required in order to fix on UC series.
- Available in 5 different color variations.

UG-1 dimensions

■ DXF/DWG/PDF/STP drawings available on our website.

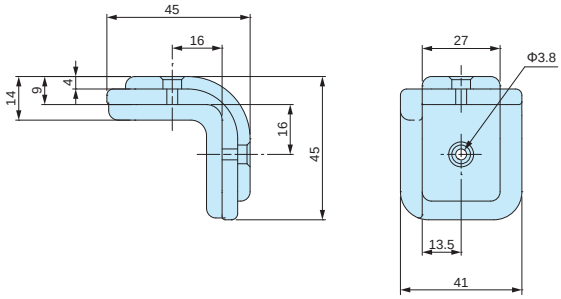

Components

No.	Part name	Material
1	Corner guard base	PP
2	Corner guard	Silicone
3	Screw (M3-8 Hexagonal)	Steel

Product no. / Details

Product no.					Weight (g)	Pack of
● Black	● Emerald	● Gray	● Navy	● Red		
UG-1B	UG-1E	UG-1G	UG-1N	UG-1R	210.5	8

Included screw : M3-8 Hexagonal : Steel : Trivalent chromate x 16 pcs + 2 Hexagonal wrench

MCG series ALUMINIUM CASE with CORNER GUARD

Conductive

- Aluminium case equipped with shockproof and anti-slip elastomer corner guards.
- Suitable to be used as a fanless PC, power supply, power storage device etc.
  Carrying handle can withstand a maximum load up to 30.0 kg.
- Corner guards are available in 4 different color variations.
- Custom sizes available.

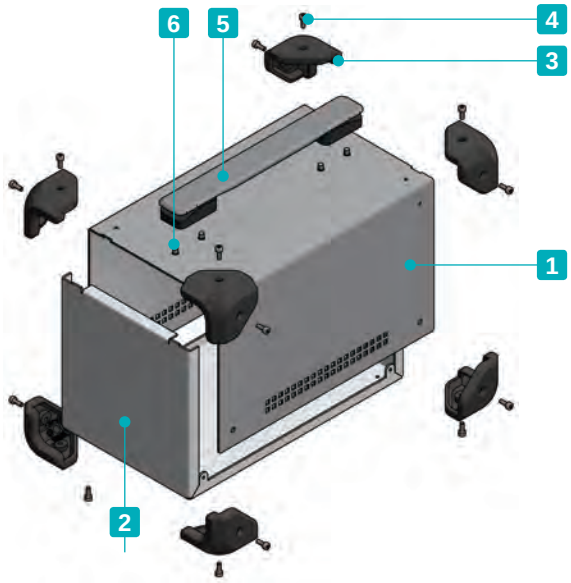

- Aluminium case and corner guard with screw fastening.

Included screws
Case / Corner guard - M4-8 Hexagonal x 16 or 18 pcs
Carrying handle - M5-8 x 4 pcs
※Hexagonal wrench included.

Components

No.	Part name	Pcs	Material	Color / Finish
1	Top cover	1	Steel SECC t=10	Black / Painted
			Aluminium A1100P t=1.5	Metallic silver / Painted (Conductive inside)
2	Base	1	Aluminium A1050P t=1.5	Black / Painted
			Aluminium A1100P t=1.5	Metallic silver / Painted (Conductive inside)
3	Corner guard	8	TPE	Black • Gray • Navy • Red
4	Case / Corner guard screw	16 / 18	Steel	Black trivalent chromate
5	Carrying handle	1	PU • PA6 • ABS • Steel	Black • Gray
6	Carrying handle screw	4	Steel	Trivalent chromate

- Top cover and base are covered with a protective film on one side.

Color Type

Code	BB Black / Black	BG Black / Gray	BN Black / Navy	BR Black / Red
Color				
Code	SB Silver / Black Conductive	SG Silver / Gray Conductive	SN Silver / Navy Conductive	SR Silver / Red Conductive
Color				

MCG dimensions

■ DXF/DWG/PDF/STP drawings available on our website.

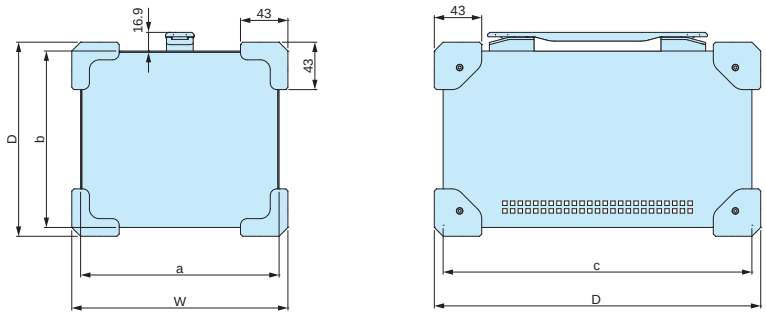

Product no. / Dimensions

■ Please suffix color code at the end of the product number.

Product no.	W	H	D	a	b	c	Weight (kg)	
							B□ models	S□ models
MCG14-14-23□□	156	156	246	140	140	230	1.2	0.9
MCG18-16-28□□	196	176	296	180	160	280	1.8	1.3
MCG21-14-24□□	226	156	256	210	140	240	1.6	1.2
MCG26-18-30□□	276	196	316	260	180	300	2.3	1.6

Accessories (Optional parts)

MG-1 CORNER GUARD

MG-1 dimensions

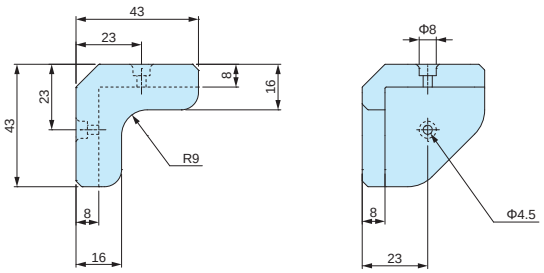

■ DXF/DWG/PDF/STP drawings available on our website.

- Corner guard part for MCG case.
- Corner guard can be installed on enclosures other than MCG series.
- M4 thread holes are required for installation.
- Available in 4 different color variations.

Components

No.	Part name	Material
1	Corner guard	TPE
2	Screw (M4-8 Hexagonal)	Steel

Product no. / Details

Product no.				Weight (g)	Pack of
● Black	● Gray	● Navy	● Red		
MG-1B	MG-1G	MG-1N	MG-1R	124	8

Included screw : M4-8 Hexagonal : Steel : Black trivalent chromate x 18 pcs + Hexagonal wrench

FC series ALUMINIUM CONTROL BOX

FC and FCW series are applicable for various purposes such as control and switch box, touch panel display, monitor box, and so on.

APPLICATION EXAMPLE

Ultrasonic Flaw Detector

Product by NOVOTEST (Ukraine)

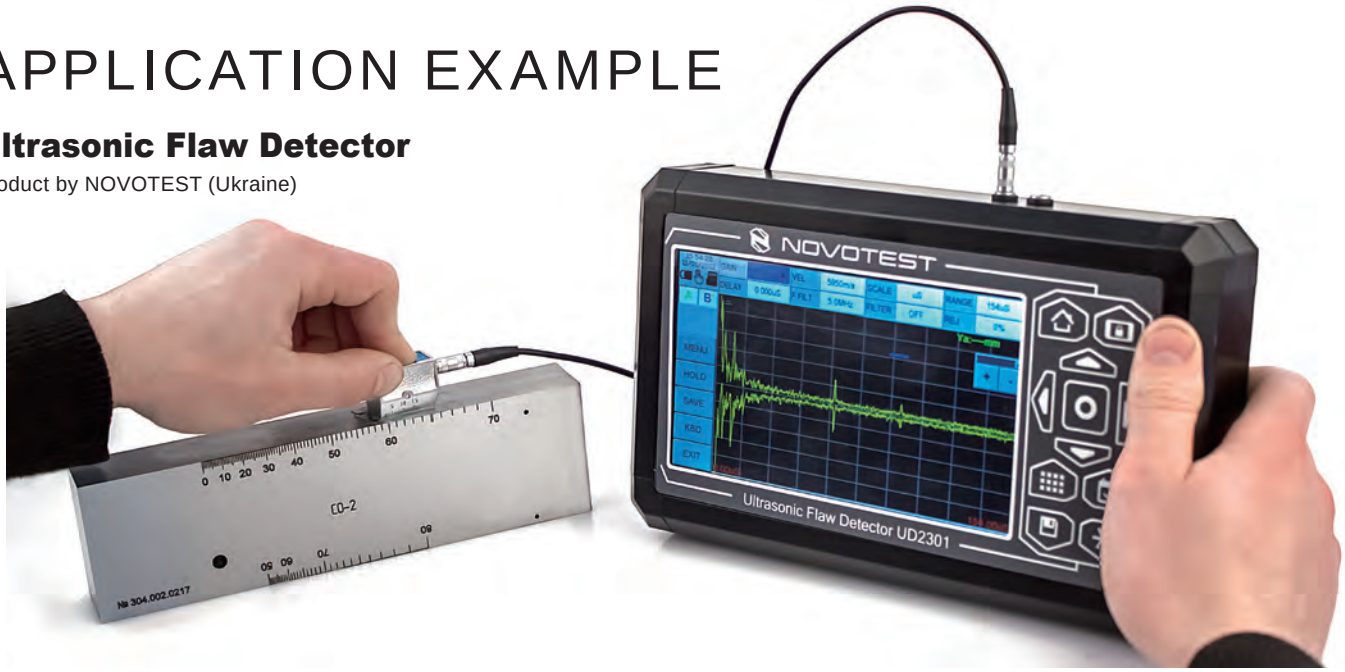

Coil Winding Machine

Product by TNK (Japan)

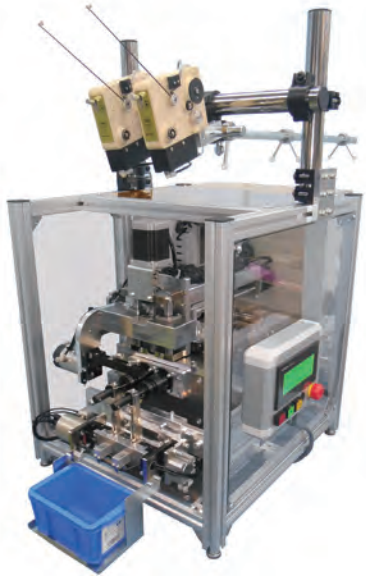

Remote Control Logger

Product by FIELD TECH (Japan)

Streaming Video Provider

Product by StreamingVideoProvider (USA)

Linux Data Logger

Product by NESA (Italy)

Solar Monitoring System

Product by TOKAI EC (Japan)

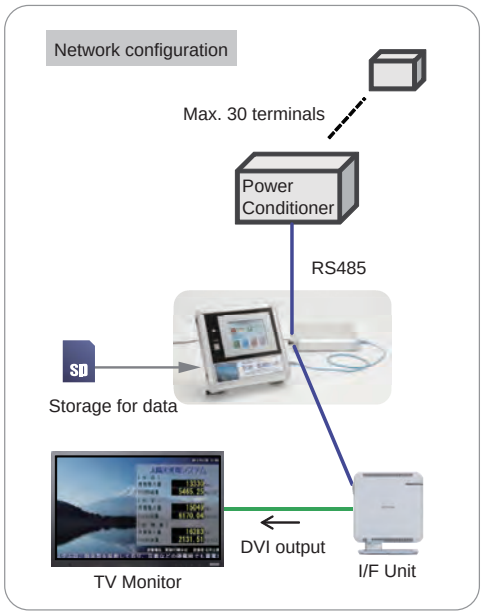

4 Channel Edge Node

Product by SHINWA (Japan)

Active RFID Tag Reader • Trigger

Product by Matrix (Japan)

Hands-free type

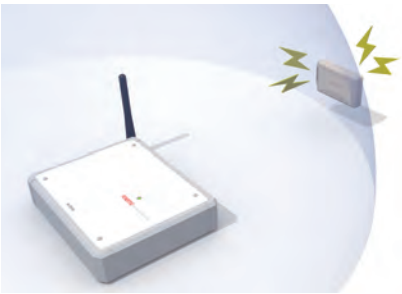

Touch type

Compact Solar Power Supply

Product by Elenagic (Japan)

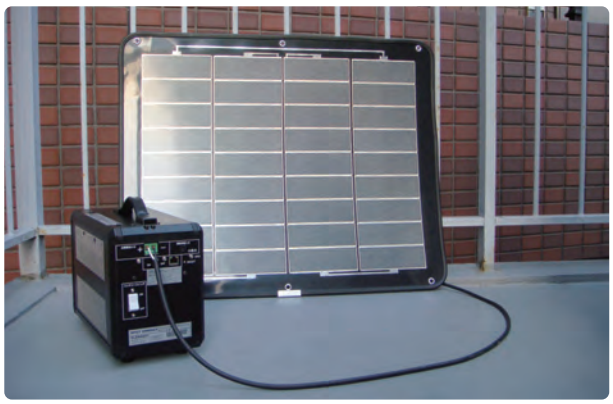

FC series ALUMINIUM CONTROL BOX

Technical Data
Protection class: IP40

- 175 different sizes in 4 different color variations available.
- Simple designed aluminium utility box composed of extruded aluminium frames, aluminium panels and ABS corner joints.
- Suitable for touch panel display, industrial control equipment, and various other devices.

Custom width / length available in 1mm intervals

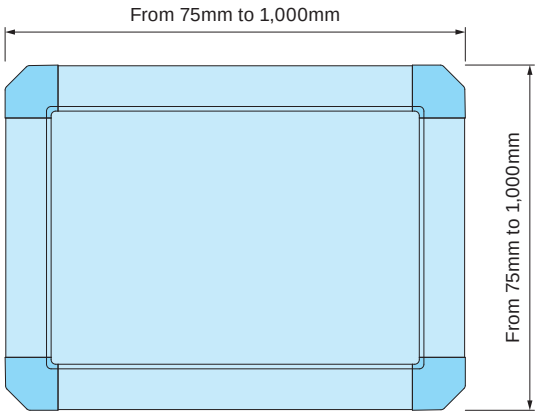

- Flexible frame width / length from 75mm to 1,000mm in 1mm intervals.
- No minimum order quantity and short lead time for small quantity order.

Assembly drawings

■ DXF/DWG/PDF/STP drawings available on our website.

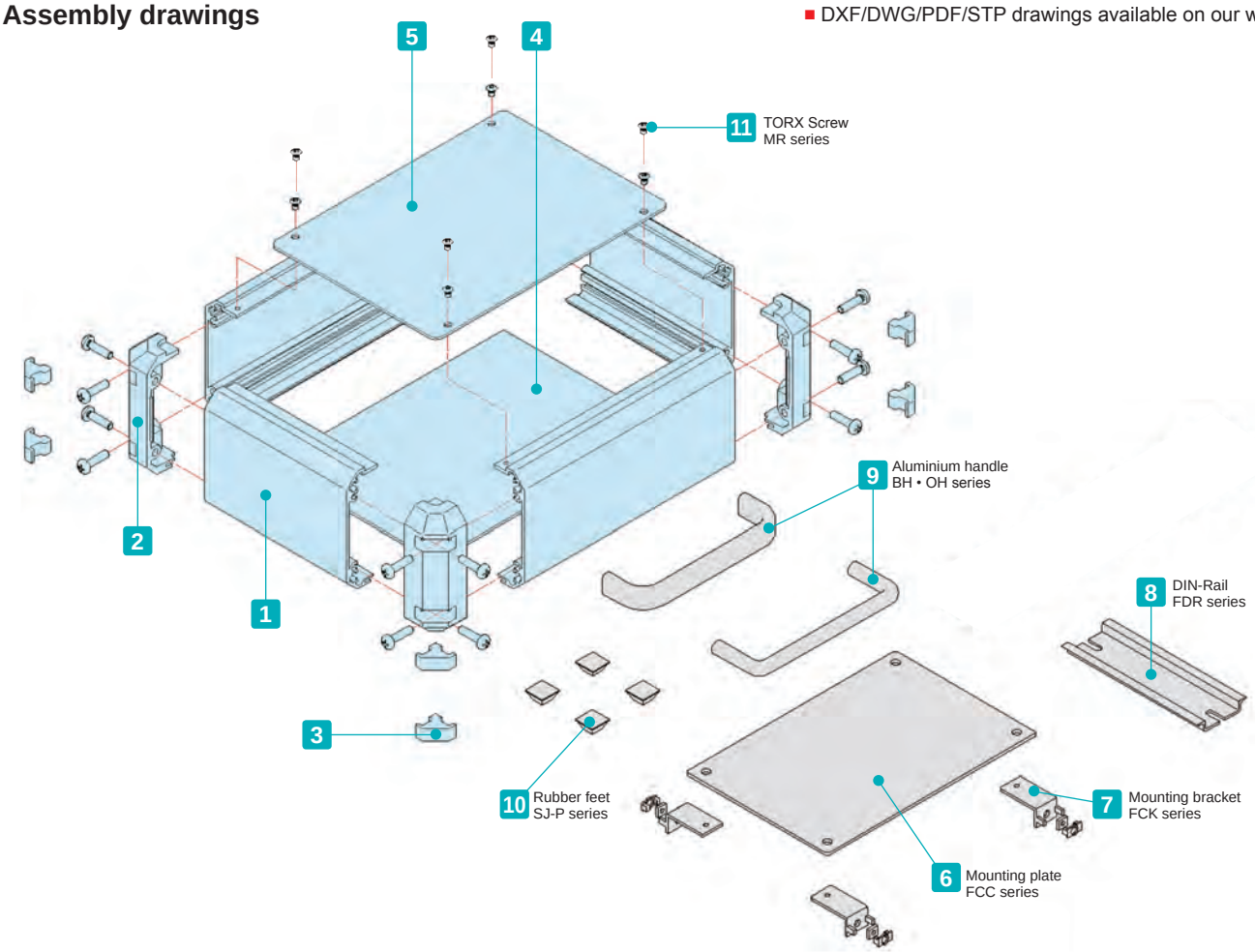

Included screws
M4-15 pan head & Trivalent chromate x 16 pcs
(M3-15 for FC4 models)
M3-5 original trapezoid head (plus) & Nickel plated / Black trivalent chromate x 8 pcs

Components

No.	Part name	Pcs	Material	Color / Finish
1	Frame	4	Extruded aluminium A6063S-T5	Silver • Black / Anodized with clear coating
2	Corner block	4	ABS UL94HB	Light gray • Black
3	Blind plug	8	Elastomer	Light gray • Black
4	Slide panel	1	Aluminium A1100P	Silver / Anodized • Black / Painted
5	Screwed panel	1	Aluminium A1100P	Silver / Anodized • Black / Painted

■ Panels are covered with a protective film on one side.

Accessories (Optional parts)

6 Mounting plate FCC series
See page 281 ~ 282

7 Mounting bracket FCK series
See page 282

8 DIN-Rail FDR series
See website

9 Aluminium handle BH • OH series
See website

10 Rubber feet SJ-P series
See page 296

11 TORX screw MR3-5Z
See website

Wall mount support arm MAR series
See page 181 ~ 182

FC dimensions

■ DXF/DWG/PDF/STP drawings available on our website.

FC4 models

■ Refer to page 273 ~ 274 for enclosure dimensions.

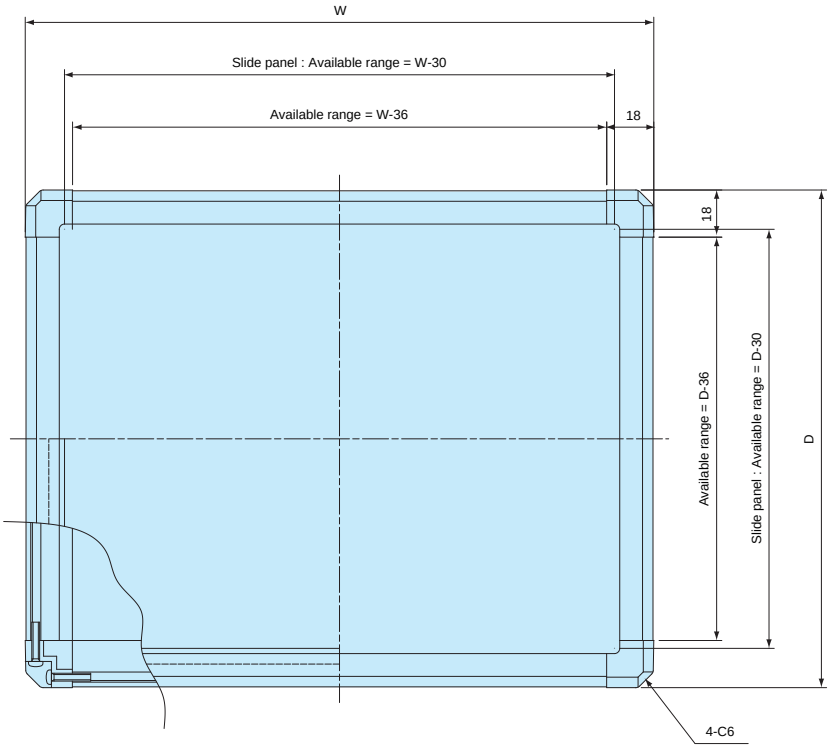

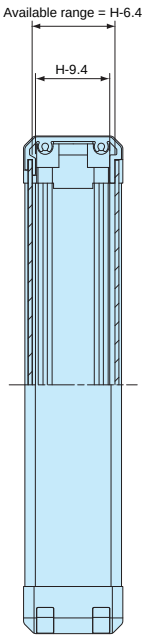

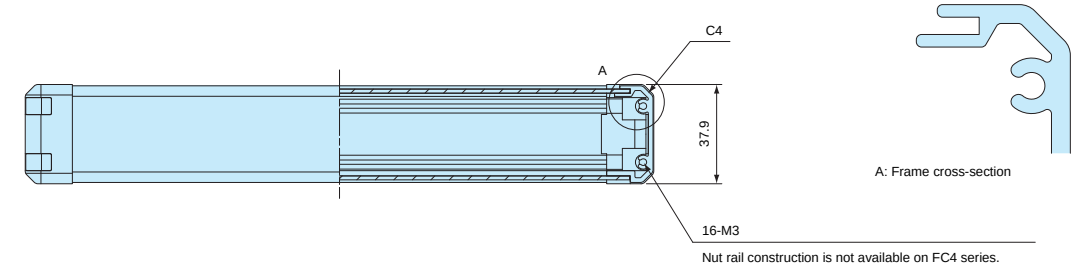

Nut rail construction is not available on FC4 series.

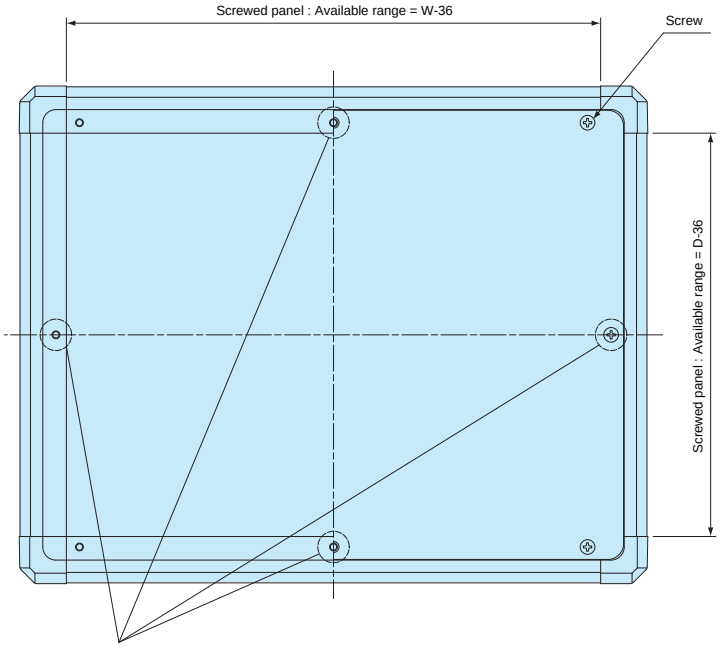

※Additional screw holes if W or D is over 390mm.

FC5 • FC6 • FC8 • FC10 • FC13 • FC15 models

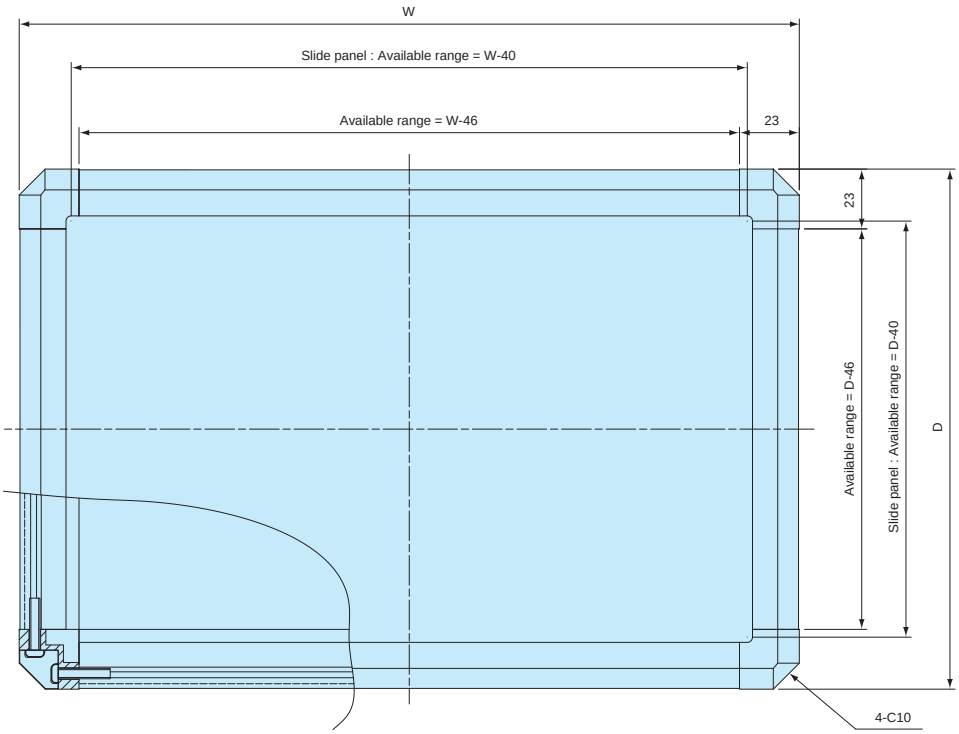

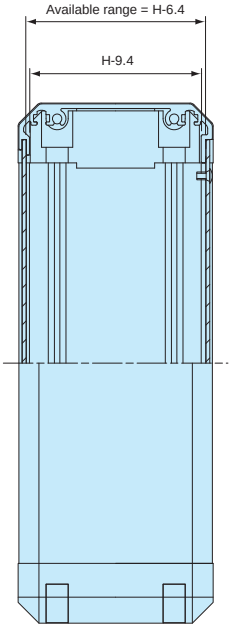

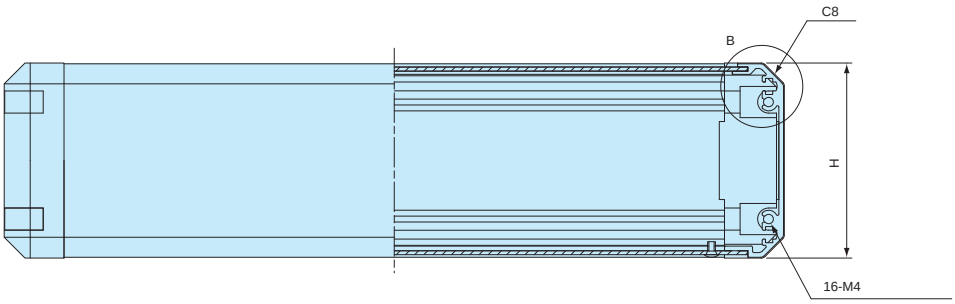

Nut rail construction

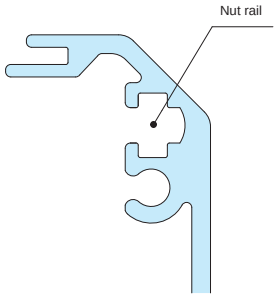

A: Frame cross-section

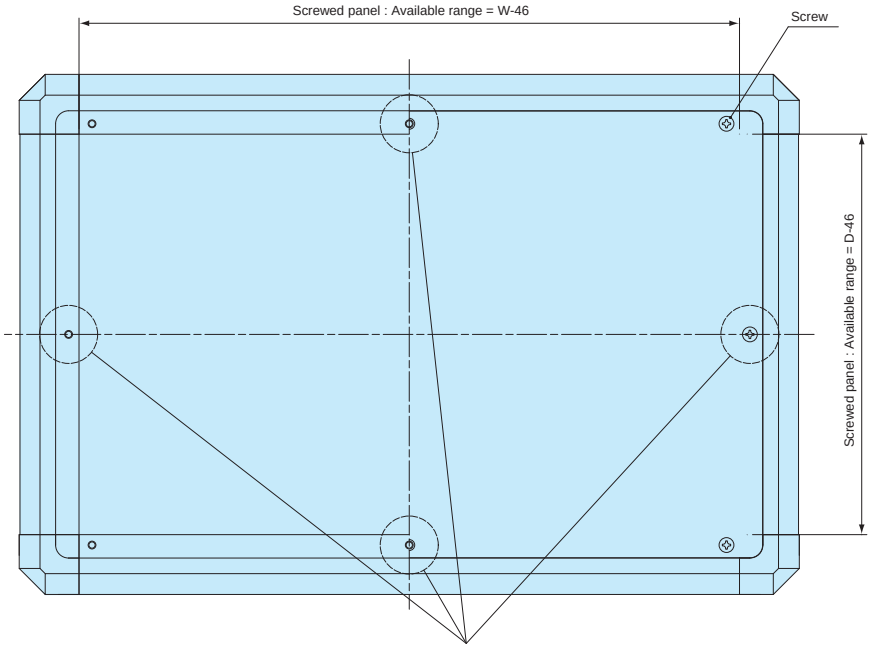

※Additional screw holes if W or D is over 400mm.

Color Type

GS		BS		BX		BB	
Panel	Silver	Panel	Silver	Panel	Silver	Panel	Black
Frame	Silver	Frame	Silver	Frame	Black	Frame	Black
Corner	Light gray	Corner	Black	Corner	Black	Corner	Black

Product no. / Dimensions

■ Please suffix color code at the end of the product number.

Product no.	H	W	D	Weight (kg)	Panel mount screw pcs
FC4- 9- 9□□	37.9	90	90	0.17	4
FC4-14- 9□□	37.9	140	90	0.24	4
FC4-14-14□□	37.9	140	140	0.33	4
FC4-19- 9□□	37.9	190	90	0.31	4
FC4-19-14□□	37.9	190	140	0.50	4
FC4-19-19□□	37.9	190	190	0.53	4
FC4-24-14□□	37.9	240	140	0.51	4
FC4-24-19□□	37.9	240	190	0.64	4
FC4-24-24□□	37.9	240	240	0.78	4
FC4-29-14□□	37.9	290	140	0.60	4
FC4-29-19□□	37.9	290	190	0.75	4
FC4-29-24□□	37.9	290	240	0.91	4
FC4-29-29□□	37.9	290	290	1.07	4
FC4-34-19□□	37.9	340	190	0.87	4
FC4-34-24□□	37.9	340	240	1.04	4
FC4-34-29□□	37.9	340	290	0.94	4
FC4-39-19□□	37.9	390	190	0.97	6
FC4-39-24□□	37.9	390	240	1.17	6
FC4-39-29□□	37.9	390	290	1.37	6
FC4-39-39□□	37.9	390	390	1.77	8
FC4-49-24□□	37.9	490	240	1.39	6
FC4-49-29□□	37.9	490	290	1.64	6
FC4-49-39□□	37.9	490	390	2.12	8
FC4-59-29□□	37.9	590	290	1.92	6
FC4-59-39□□	37.9	590	390	2.46	8
FC5-10-10□□	50.4	100	100	0.24	4
FC5-15-10□□	50.4	150	100	0.33	4
FC5-15-15□□	50.4	150	150	0.44	4
FC5-20-10□□	50.4	200	100	0.42	4
FC5-20-15□□	50.4	200	150	0.55	4
FC5-20-20□□	50.4	200	200	0.68	4
FC5-25-15□□	50.4	250	150	0.66	4
FC5-25-20□□	50.4	250	200	0.81	4
FC5-25-25□□	50.4	250	250	0.97	4
FC5-30-15□□	50.4	300	150	0.77	4
FC5-30-20□□	50.4	300	200	0.94	4
FC5-30-25□□	50.4	300	250	1.11	4
FC5-30-30□□	50.4	300	300	1.29	4
FC5-35-20□□	50.4	350	200	1.07	4
FC5-35-25□□	50.4	350	250	1.26	4
FC5-35-30□□	50.4	350	300	1.46	4
FC5-40-20□□	50.4	400	200	1.20	6
FC5-40-25□□	50.4	400	250	1.42	6
FC5-40-30□□	50.4	400	300	1.64	6

Product no.	H	W	D	Weight (kg)	Panel mount screw pcs
FC5-40-40□□	50.4	400	400	2.07	8
FC5-50-25□□	50.4	500	250	1.66	6
FC5-50-30□□	50.4	500	300	1.92	6
FC5-50-40□□	50.4	500	400	2.44	8
FC5-60-30□□	50.4	600	300	2.22	6
FC5-60-40□□	50.4	600	400	2.81	8
FC6-10-10□□	62.9	100	100	0.26	4
FC6-15-10□□	62.9	150	100	0.35	4
FC6-15-15□□	62.9	150	150	0.47	4
FC6-20-10□□	62.9	200	100	0.45	4
FC6-20-15□□	62.9	200	150	0.58	4
FC6-20-20□□	62.9	200	200	0.72	4
FC6-25-15□□	62.9	250	150	0.70	4
FC6-25-20□□	62.9	250	200	0.85	4
FC6-25-25□□	62.9	250	250	1.01	4
FC6-30-15□□	62.9	300	150	0.81	4
FC6-30-20□□	62.9	300	200	0.99	4
FC6-30-25□□	62.9	300	250	1.16	4
FC6-30-30□□	62.9	300	300	1.35	4
FC6-35-20□□	62.9	350	200	1.12	4
FC6-35-25□□	62.9	350	250	1.32	4
FC6-35-30□□	62.9	350	300	1.52	4
FC6-40-20□□	62.9	400	200	1.25	6
FC6-40-25□□	62.9	400	250	1.47	6
FC6-40-30□□	62.9	400	300	1.70	6
FC6-40-40□□	62.9	400	400	2.15	8
FC6-50-25□□	62.9	500	250	1.72	6
FC6-50-30□□	62.9	500	300	1.99	6
FC6-50-40□□	62.9	500	400	2.52	8
FC6-60-30□□	62.9	600	300	2.29	6
FC6-60-40□□	62.9	600	400	2.43	8
FC8-10-10□□	75.4	100	100	0.28	4
FC8-15-10□□	75.4	150	100	0.38	4
FC8-15-15□□	75.4	150	150	0.50	4
FC8-20-10□□	75.4	200	100	0.48	4
FC8-20-15□□	75.4	200	150	0.62	4
FC8-20-20□□	75.4	200	200	0.76	4
FC8-25-15□□	75.4	250	150	0.74	4
FC8-25-20□□	75.4	250	200	0.90	4
FC8-25-25□□	75.4	250	250	1.07	4
FC8-30-15□□	75.4	300	150	0.86	4
FC8-30-20□□	75.4	300	200	1.04	4
FC8-30-25□□	75.4	300	250	1.23	4
FC8-30-30□□	75.4	300	300	1.42	4

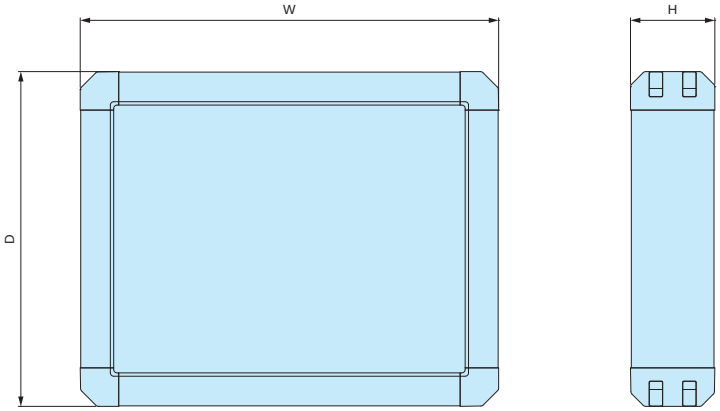

Product no.	H	W	D	Weight (kg)	Panel mount screw pcs
FC 8-35-20□□	75.4	350	200	1.19	4
FC 8-35-25□□	75.4	350	250	1.39	4
FC 8-35-30□□	75.4	350	300	1.51	4
FC 8-40-20□□	75.4	400	200	1.32	6
FC 8-40-25□□	75.4	400	250	1.46	6
FC 8-40-30□□	75.4	400	300	1.78	6
FC 8-40-40□□	75.4	400	400	2.24	8
FC 8-50-25□□	75.4	500	250	1.81	6
FC 8-50-30□□	75.4	500	300	2.08	6
FC 8-50-40□□	75.4	500	400	2.62	8
FC 8-60-30□□	75.4	600	300	2.39	6
FC 8-60-40□□	75.4	600	400	3.00	8
FC10-10-10□□	100.4	100	100	0.31	4
FC10-15-10□□	100.4	150	100	0.43	4
FC10-15-15□□	100.4	150	150	0.56	4
FC10-20-10□□	100.4	200	100	0.54	4
FC10-20-15□□	100.4	200	150	0.70	4
FC10-20-20□□	100.4	200	200	0.85	4
FC10-25-15□□	100.4	250	150	0.83	4
FC10-25-20□□	100.4	250	200	1.01	4
FC10-25-25□□	100.4	250	250	1.19	4
FC10-30-15□□	100.4	300	150	0.97	4
FC10-30-20□□	100.4	300	200	1.16	4
FC10-30-25□□	100.4	300	250	1.36	4
FC10-30-30□□	100.4	300	300	1.57	4
FC10-35-20□□	100.4	350	200	1.32	4
FC10-35-25□□	100.4	350	250	1.54	4
FC10-35-30□□	100.4	350	300	1.77	4
FC10-40-20□□	100.4	400	200	1.47	6
FC10-40-25□□	100.4	400	250	1.72	6
FC10-40-30□□	100.4	400	300	1.96	6
FC10-40-40□□	100.4	400	400	2.45	8
FC10-50-25□□	100.4	500	250	1.99	6
FC10-50-30□□	100.4	500	300	2.27	6
FC10-50-40□□	100.4	500	400	2.84	8
FC10-60-30□□	100.4	600	300	2.60	6
FC10-60-40□□	100.4	600	400	2.70	8
FC13-10-10□□	125.4	100	100	0.35	4
FC13-15-10□□	125.4	150	100	0.47	4
FC13-15-15□□	125.4	150	150	0.61	4
FC13-20-10□□	125.4	200	100	0.59	4
FC13-20-15□□	125.4	200	150	0.75	4
FC13-20-20□□	125.4	200	200	0.92	4
FC13-25-15□□	125.4	250	150	0.90	4

Product no.	H	W	D	Weight (kg)	Panel mount screw pcs
FC13-25-20□□	125.4	250	200	1.08	4
FC13-25-25□□	125.4	250	250	1.27	4
FC13-30-15□□	125.4	300	150	1.04	4
FC13-30-20□□	125.4	300	200	1.24	4
FC13-30-25□□	125.4	300	250	1.44	4
FC13-30-30□□	125.4	300	300	1.66	4
FC13-35-20□□	125.4	350	200	1.40	4
FC13-35-25□□	125.4	350	250	1.63	4
FC13-35-30□□	125.4	350	300	1.86	4
FC13-40-20□□	125.4	400	200	1.56	6
FC13-40-25□□	125.4	400	250	1.81	6
FC13-40-30□□	125.4	400	300	2.06	6
FC13-40-40□□	125.4	400	400	2.56	8
FC13-50-25□□	125.4	500	250	2.09	6
FC13-50-30□□	125.4	500	300	2.38	6
FC13-50-40□□	125.4	500	400	2.96	8
FC13-60-30□□	125.4	600	300	2.89	6
FC13-60-40□□	125.4	600	400	3.36	8
FC15-10-10□□	150.4	100	100	0.40	4
FC15-15-10□□	150.4	150	100	0.54	4
FC15-15-15□□	150.4	150	150	0.70	4
FC15-20-10□□	150.4	200	100	0.68	4
FC15-20-15□□	150.4	200	150	0.85	4
FC15-20-20□□	150.4	200	200	1.04	4
FC15-25-15□□	150.4	250	150	1.02	4
FC15-25-20□□	150.4	250	200	1.22	4
FC15-25-25□□	150.4	250	250	1.42	4
FC15-30-15□□	150.4	300	150	1.17	4
FC15-30-20□□	150.4	300	200	1.40	4
FC15-30-25□□	150.4	300	250	1.62	4
FC15-30-30□□	150.4	300	300	1.85	4
FC15-35-20□□	150.4	350	200	1.58	4
FC15-35-25□□	150.4	350	250	1.82	4
FC15-35-30□□	150.4	350	300	2.07	4
FC15-40-20□□	150.4	400	200	1.76	6
FC15-40-25□□	150.4	400	250	2.02	6
FC15-40-30□□	150.4	400	300	2.29	6
FC15-40-40□□	150.4	400	400	2.83	8
FC15-50-25□□	150.4	500	250	2.32	6
FC15-50-30□□	150.4	500	300	2.63	6
FC15-50-40□□	150.4	500	400	3.25	8
FC15-60-30□□	150.4	600	300	2.98	6
FC15-60-40□□	150.4	600	400	3.66	8

FCW series OPEN-CLOSING CONTROL BOX

- 108 different sizes in 2 different color variations available.
- Easy access to the inside of the case with opening/closing cover.
- Both with and without key lock types are available.
- Suitable for touch panel display, industrial control equipment and many others.

Custom width / length available

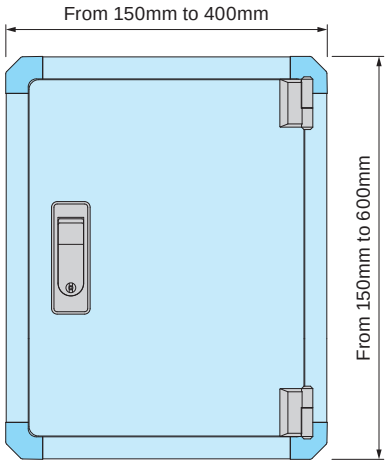

- Flexible frame width / length in 1mm intervals.
- No minimum order quantity and short lead time for small quantity order.

Assembly drawings

■ DXF/DWG/PDF/STP drawings available on our website.

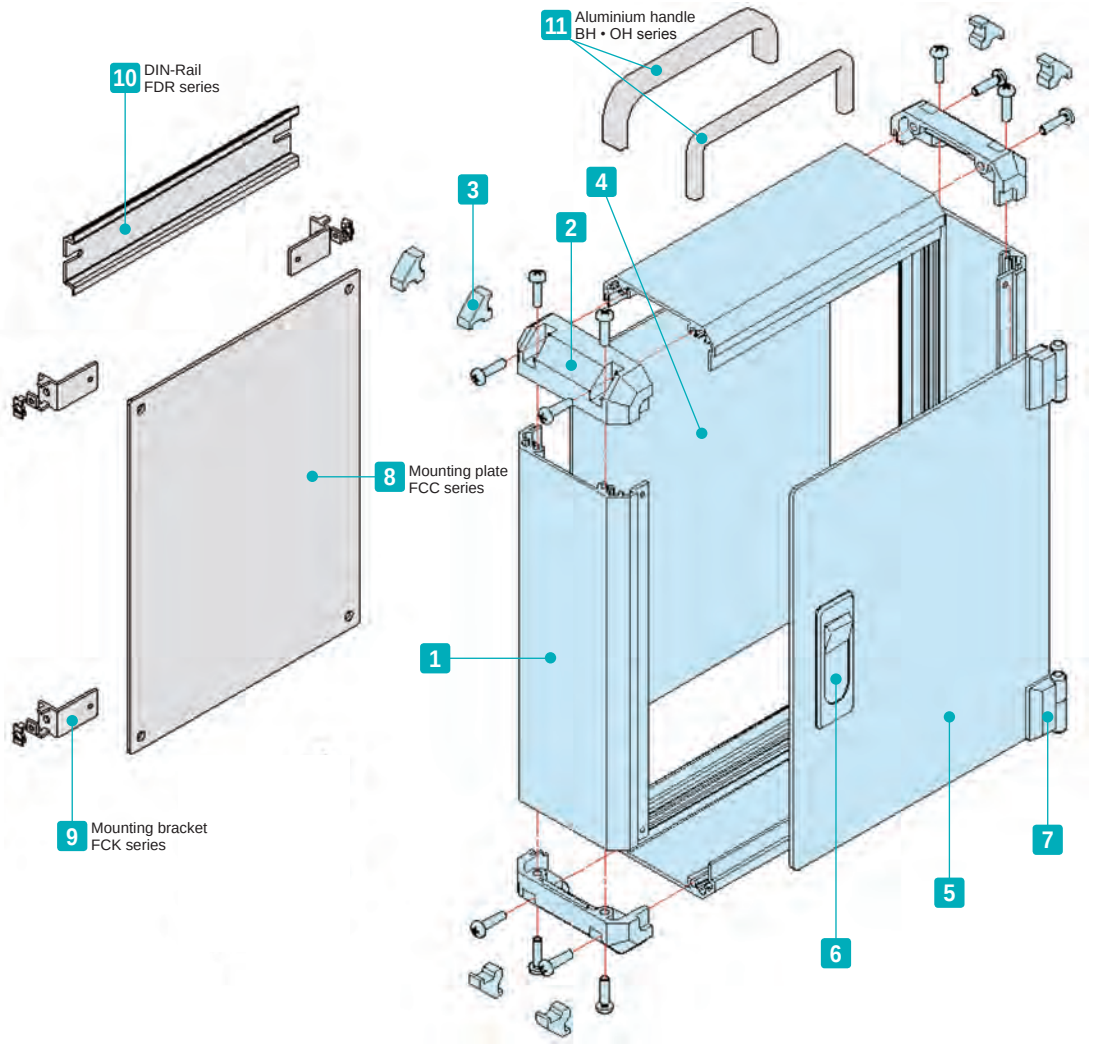

Included screws
M4-15 pan head & Trivalent chromate x 16 pcs
M3-5 pan head & Trivalent chromate x 2 pcs or 3 pcs
M3-5 flat head & Trivalent chromate x 2 pcs or 3 pcs
M4-8 slotted raised countersunk & Trivalent chromate x 2 pcs or 4 pcs
M4-6 slotted raised countersunk & Trivalent chromate x 2 pcs or 4 pcs

Components

No.	Part name	Pcs	Material	Color / Finish
1	Frame	4	Extruded aluminium A6063S-T5	Silver / Anodized with clear coating
2	Corner block	4	ABS UL94HB	Light gray • Black
3	Blind plug	8	Elastomer	Light gray • Black
4	Slide panel	1	Aluminium A1100P	Silver / Anodized
5	Open-closing panel	1	Aluminium A1100P	Silver / Anodized
6	Flat handle	1 set	Diecast Zinc	Silver / Painted
7	Hinge	1 set	Diecast Zinc	Silver / Painted

■ Panels are covered with a protective film on one side.

Accessories (Optional parts)

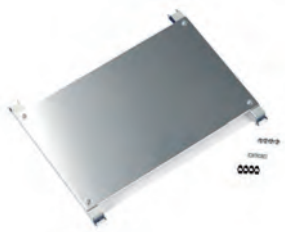

8 Mounting plate FCC series
See page 281 ~ 282

9 Mounting bracket FCK series
See page 282

10 DIN-Rail FDR series
See website

11 Aluminium handle BH • OH series
See website

Flat Handle Type

N : Normal type	K : Key lock type

Color Type

GS	BS

FCW dimensions

■ DXF/DWG/PDF/STP drawings available on our website.

Handle - 1 pc / Hinge - 2 pcs type

Not applicable for FCW□-30-50, FCW□-40-50, and FCW□-40-60 models.

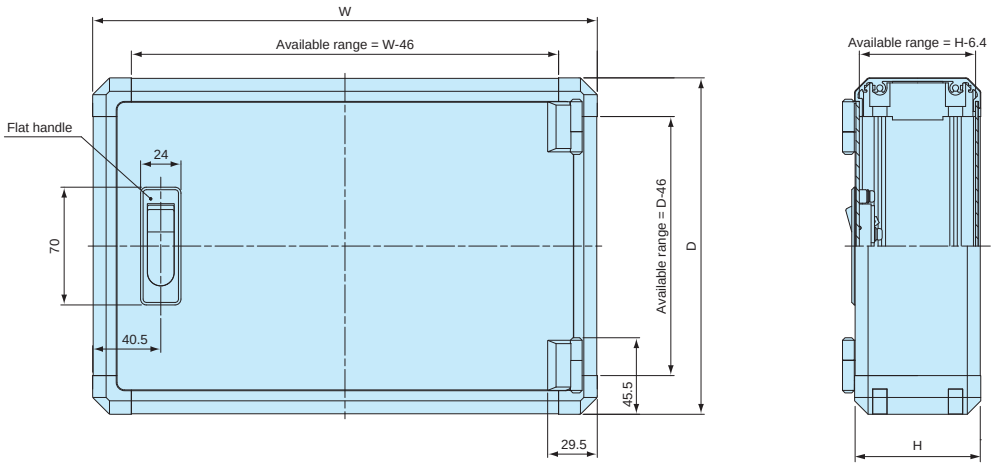

Handle - 2 pcs / Hinge - 3 pcs type

Applicable for FCW□-30-50, FCW□-40-50, and FCW□-40-60 models.

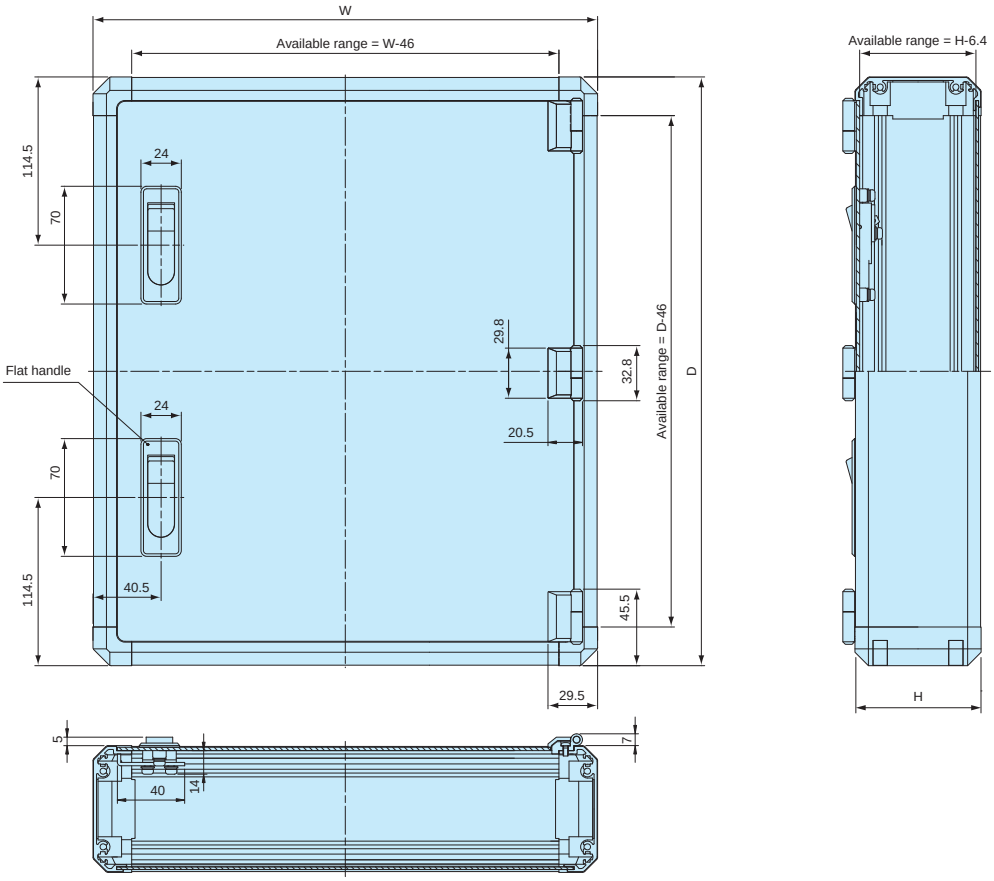

Specify your order with complete combination product number as per below

FCW 5 - 20 - 15 □ □□

□ Flat Handle Type (N or K)

□□ Color Code (GS or BS)

Product no. / Dimensions

Product no.	H	W	D	Weight (kg)	Flat handle / Hinge pcs
FCW5-15-20□□□	50.4	150	200	0.69	1 / 2
FCW5-15-25□□□	50.4	150	250	0.80	1 / 2
FCW5-20-15□□□	50.4	200	150	0.69	1 / 2
FCW5-20-20□□□	50.4	200	200	0.83	1 / 2
FCW5-20-25□□□	50.4	200	250	0.97	1 / 2
FCW5-20-30□□□	50.4	200	300	1.11	1 / 2
FCW5-25-25□□□	50.4	250	250	1.14	1 / 2
FCW5-25-30□□□	50.4	250	300	1.30	1 / 2
FCW5-25-40□□□	50.4	250	400	1.63	1 / 2
FCW5-30-20□□□	50.4	300	200	1.11	1 / 2
FCW5-30-30□□□	50.4	300	300	1.50	1 / 2
FCW5-30-40□□□	50.4	300	400	1.87	1 / 2
FCW5-30-50□□□	50.4	300	500	2.28	2 / 3
FCW5-35-25□□□	50.4	350	250	1.47	1 / 2
FCW5-40-30□□□	50.4	400	300	1.88	1 / 2
FCW5-40-40□□□	50.4	400	400	2.37	1 / 2
FCW5-40-50□□□	50.4	400	500	2.82	2 / 3
FCW5-40-60□□□	50.4	400	600	3.28	2 / 3
FCW6-15-20□□□	62.9	150	200	0.72	1 / 2
FCW6-15-25□□□	62.9	150	250	0.84	1 / 2
FCW6-20-15□□□	62.9	200	150	0.72	1 / 2
FCW6-20-20□□□	62.9	200	200	0.86	1 / 2
FCW6-20-25□□□	62.9	200	250	1.01	1 / 2
FCW6-20-30□□□	62.9	200	300	1.16	1 / 2
FCW6-25-25□□□	62.9	250	250	1.18	1 / 2
FCW6-25-30□□□	62.9	250	300	1.35	1 / 2
FCW6-25-40□□□	62.9	250	400	1.69	1 / 2
FCW6-30-20□□□	62.9	300	200	1.16	1 / 2
FCW6-30-30□□□	62.9	300	300	1.55	1 / 2
FCW6-30-40□□□	62.9	300	400	1.93	1 / 2
FCW6-30-50□□□	62.9	300	500	2.35	2 / 3
FCW6-35-25□□□	62.9	350	250	1.46	1 / 2
FCW6-40-30□□□	62.9	400	300	1.94	1 / 2
FCW6-40-40□□□	62.9	400	400	2.44	1 / 2
FCW6-40-50□□□	62.9	400	500	2.94	2 / 3
FCW6-40-60□□□	62.9	400	600	3.36	2 / 3
FCW8-15-20□□□	75.4	150	200	0.76	1 / 2
FCW8-15-25□□□	75.4	150	250	0.88	1 / 2
FCW8-20-15□□□	75.4	200	150	0.76	1 / 2
FCW8-20-20□□□	75.4	200	200	0.91	1 / 2
FCW8-20-25□□□	75.4	200	250	1.06	1 / 2
FCW8-20-30□□□	75.4	200	300	1.21	1 / 2
FCW8-25-25□□□	75.4	250	250	1.24	1 / 2
FCW8-25-30□□□	75.4	250	300	1.41	1 / 2
FCW8-25-40□□□	75.4	250	400	1.76	1 / 2
FCW8-30-20□□□	75.4	300	200	1.21	1 / 2
FCW8-30-30□□□	75.4	300	300	1.62	1 / 2
FCW8-30-40□□□	75.4	300	400	2.02	1 / 2
FCW8-30-50□□□	75.4	300	500	2.44	2 / 3
FCW8-35-25□□□	75.4	350	250	1.59	1 / 2
FCW8-40-30□□□	75.4	400	300	2.02	1 / 2
FCW8-40-40□□□	75.4	400	400	2.53	1 / 2
FCW8-40-50□□□	75.4	400	500	3.05	2 / 3
FCW8-40-60□□□	75.4	400	600	3.47	2 / 3

Product no.	H	W	D	Weight (kg)	Flat handle / Hinge pcs
FCW10-15-20□□□	100.4	150	200	0.83	1 / 2
FCW10-15-25□□□	100.4	150	250	0.97	1 / 2
FCW10-20-15□□□	100.4	200	150	0.83	1 / 2
FCW10-20-20□□□	100.4	200	200	1.00	1 / 2
FCW10-20-25□□□	100.4	200	250	1.17	1 / 2
FCW10-20-30□□□	100.4	200	300	1.33	1 / 2
FCW10-25-25□□□	100.4	250	250	1.36	1 / 2
FCW10-25-30□□□	100.4	250	300	1.55	1 / 2
FCW10-25-40□□□	100.4	250	400	1.93	1 / 2
FCW10-30-20□□□	100.4	300	200	1.34	1 / 2
FCW10-30-30□□□	100.4	300	300	1.77	1 / 2
FCW10-30-40□□□	100.4	300	400	2.20	1 / 2
FCW10-30-50□□□	100.4	300	500	2.64	2 / 3
FCW10-35-25□□□	100.4	350	250	1.74	1 / 2
FCW10-40-30□□□	100.4	400	300	2.21	1 / 2
FCW10-40-40□□□	100.4	400	400	2.74	1 / 2
FCW10-40-50□□□	100.4	400	500	3.27	2 / 3
FCW10-40-60□□□	100.4	400	600	3.71	2 / 3
FCW13-15-20□□□	125.4	150	200	0.89	1 / 2
FCW13-15-25□□□	125.4	150	250	1.04	1 / 2
FCW13-20-15□□□	125.4	200	150	0.89	1 / 2
FCW13-20-20□□□	125.4	200	200	1.06	1 / 2
FCW13-20-25□□□	125.4	200	250	1.32	1 / 2
FCW13-20-30□□□	125.4	200	300	1.41	1 / 2
FCW13-25-25□□□	125.4	250	250	1.44	1 / 2
FCW13-25-30□□□	125.4	250	300	1.63	1 / 2
FCW13-25-40□□□	125.4	250	400	2.02	1 / 2
FCW13-30-20□□□	125.4	300	200	1.41	1 / 2
FCW13-30-30□□□	125.4	300	300	1.94	1 / 2
FCW13-30-40□□□	125.4	300	400	2.30	1 / 2
FCW13-30-50□□□	125.4	300	500	2.74	2 / 3
FCW13-35-25□□□	125.4	350	250	1.83	1 / 2
FCW13-40-30□□□	125.4	400	300	2.30	1 / 2
FCW13-40-40□□□	125.4	400	400	2.86	1 / 2
FCW13-40-50□□□	125.4	400	500	3.39	2 / 3
FCW13-40-60□□□	125.4	400	600	3.84	2 / 3
FCW15-15-20□□□	150.4	150	200	0.96	1 / 2
FCW15-15-25□□□	150.4	150	250	1.07	1 / 2
FCW15-20-15□□□	150.4	200	150	0.91	1 / 2
FCW15-20-20□□□	150.4	200	200	1.18	1 / 2
FCW15-20-25□□□	150.4	200	250	1.37	1 / 2
FCW15-20-30□□□	150.4	200	300	1.57	1 / 2
FCW15-25-25□□□	150.4	250	250	1.59	1 / 2
FCW15-25-30□□□	150.4	250	300	1.80	1 / 2
FCW15-25-40□□□	150.4	250	400	2.23	1 / 2
FCW15-30-20□□□	150.4	300	200	1.57	1 / 2
FCW15-30-30□□□	150.4	300	300	2.05	1 / 2
FCW15-30-40□□□	150.4	300	400	2.53	1 / 2
FCW15-30-50□□□	150.4	300	500	2.99	2 / 3
FCW15-35-25□□□	150.4	350	250	2.02	1 / 2
FCW15-40-30□□□	150.4	400	300	2.53	1 / 2
FCW15-40-40□□□	150.4	400	400	3.12	1 / 2
FCW15-40-50□□□	150.4	400	500	3.68	2 / 3
FCW15-40-60□□□	150.4	400	600	4.14	2 / 3

Cross-section view of FC • FCW

■ DXF/DWG/PDF/STP drawings available on our website.

FC4

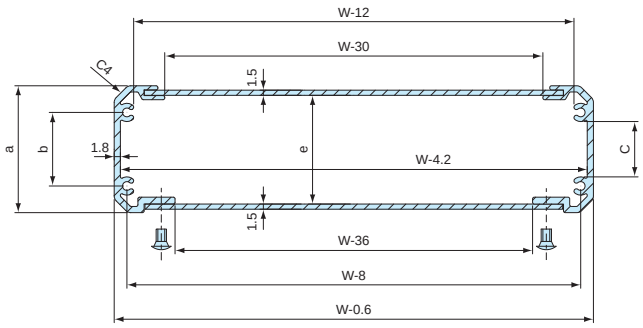

FC5 • FC6 • FC8 • FC10 • FC13 • FC15

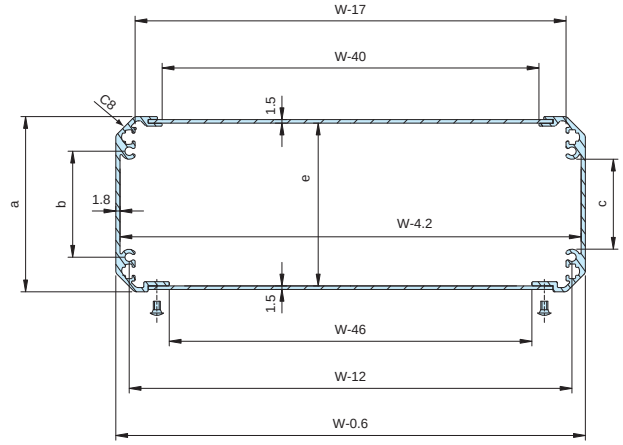

FCW5 • FCW6 • FCW8 • FCW10 • FCW13 • FCW15

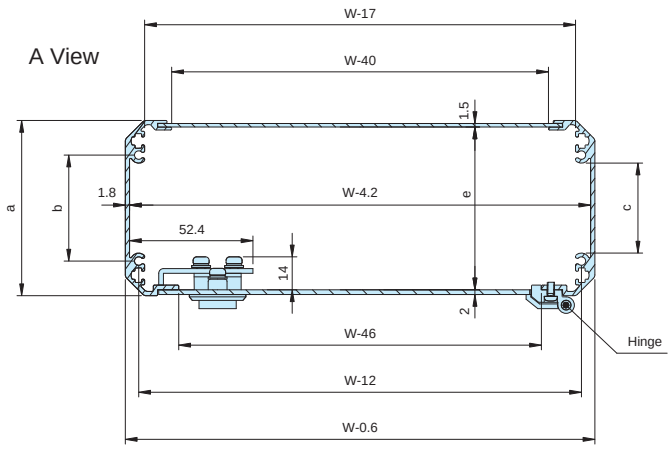

W Cross-section

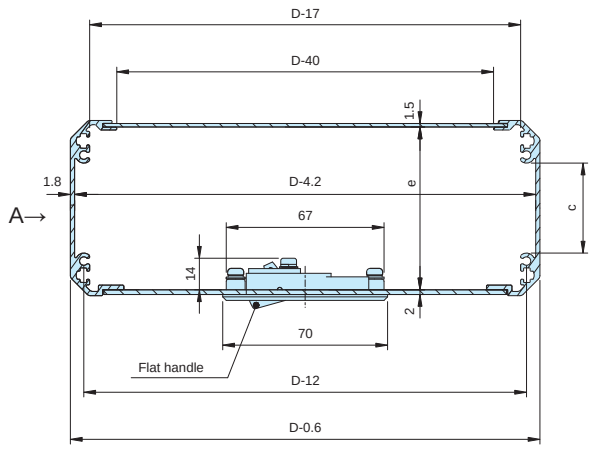

D cross-section

Box height	a	b	c	e
37.9	36.9	21.4	16.1	31.5
50.4	49.4	20	13.2	44
62.9	61.9	32.5	25.7	56.5
75.4	74.4	45	38.2	69
100.4	99.4	70	63.2	94
125.4	124.4	95	88.2	119
150.4	149.4	120	113.2	144

FCH SERIES CONTROL BOX with CARRYING HANDLE

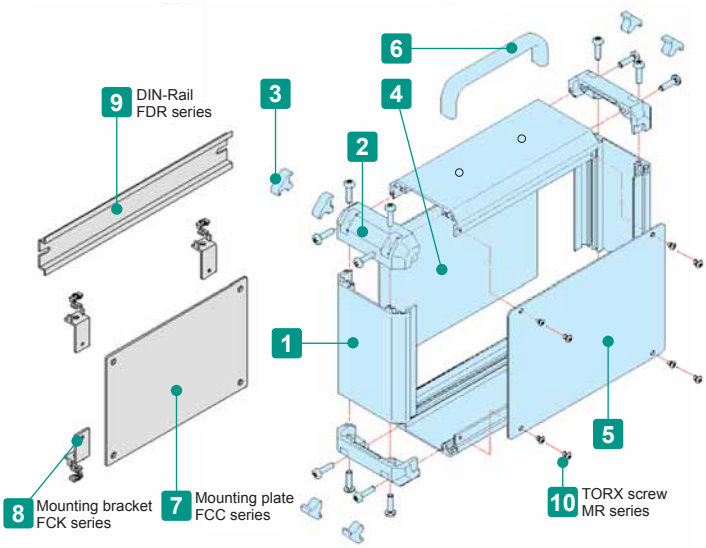

Technical Data
Protection class: IP40

- 23 different sizes in 2 different color variations available.
- Equipped with an aluminium carrying handle for mobile use.
- Comes with a 25kg maximum load carrying handle attachment.
- Simple designed aluminium utility box composed of extruded aluminium frames, aluminium panels and ABS corner joints.

Included screws
M4-15 Pan head trivalent chromate x 16 pcs
M3-5 Slotted raised countersunk / Silver = Nickel plated, Black = Trivalent chromate x 8 pcs
M4-10 Pan head trivalent chromate with spring washer x 2 pcs

Components

No.	Part name	Pcs	Material	Color / Finish
1	Frame	4	Extruded aluminium A6063S-T5	Silver • Black / Anodized
2	Corner block	4	ABS UL94HB	Light gray • Black
3	Blind plug	8	TPE	Light gray • Black
4	Slide panel	1	Aluminium A1050P t=1.5	Silver / Hairline brushed & Anodized
			Aluminium A1100P t=1.5	Black / Painted
5	Screwed panel	1	Aluminium A1050P t=1.5	Silver / Hairline brushed & Anodized
			Aluminium A1100P t=1.5	Black / Painted
6	Carrying handle	1	Aluminium A6063S-T5	Silver • Black / Anodized

Accessories (Optional parts)

7 Mounting plate FCC series
See page FCC • FCK-1 ~ FCC • FCK-2

8 Mounting bracket FCK series
See page FCC • FCK-2

9 DIN-Rail FDR series
See page MR • FDR-1

10 TORX screw MR3-5Z
See page MR • FDR-1

FCH dimensions

■ Drawings below are reference examples only.
DXF/DWG/PDF drawings available on our website.

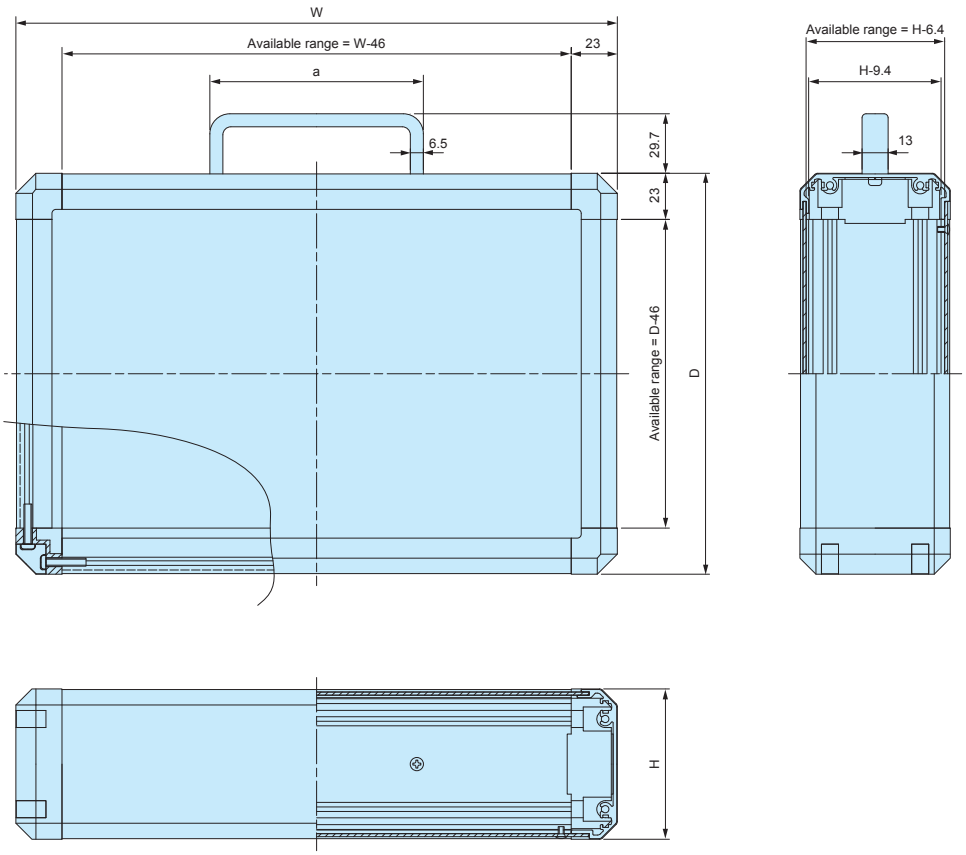

Product no. / Dimensions

Product no.		H	W	D	a	Weight (kg)
◑ Light gray • Silver	● Black • Black					
FCH 8-20-15GS	FCH 8-20-15BB	75.4	200	150	106.5	0.65
FCH 8-20-20GS	FCH 8-20-20BB	75.4	200	200	106.5	0.79
FCH 8-25-15GS	FCH 8-25-15BB	75.4	250	150	106.5	0.77
FCH 8-25-20GS	FCH 8-25-20BB	75.4	250	200	106.5	0.93
FCH 8-25-25GS	FCH 8-25-25BB	75.4	250	250	106.5	1.10
FCH 8-30-20GS	FCH 8-30-20BB	75.4	300	200	126.5	1.07
FCH 8-30-25GS	FCH 8-30-25BB	75.4	300	250	126.5	1.26
FCH 8-30-30GS	FCH 8-30-30BB	75.4	300	300	126.5	1.45
FCH 8-35-20GS	FCH 8-35-20BB	75.4	350	200	126.5	1.22
FCH 8-35-25GS	FCH 8-35-25BB	75.4	350	250	126.5	1.42
FCH 8-35-30GS	FCH 8-35-30BB	75.4	350	300	126.5	1.54
FCH 8-40-25GS	FCH 8-40-25BB	75.4	400	250	126.5	1.49
FCH 8-40-30GS	FCH 8-40-30BB	75.4	400	300	126.5	1.81
FCH 8-40-40GS	FCH 8-40-40BB	75.4	400	400	126.5	2.27
FCH10-30-20GS	FCH10-30-20BB	100.4	300	200	126.5	1.19
FCH10-30-25GS	FCH10-30-25BB	100.4	300	250	126.5	1.39
FCH10-30-30GS	FCH10-30-30BB	100.4	300	300	126.5	1.60
FCH10-35-20GS	FCH10-35-20BB	100.4	350	200	126.5	1.35
FCH10-35-25GS	FCH10-35-25BB	100.4	350	250	126.5	1.57
FCH10-35-30GS	FCH10-35-30BB	100.4	350	300	126.5	1.80
FCH10-40-25GS	FCH10-40-25BB	100.4	400	250	126.5	1.75
FCH10-40-30GS	FCH10-40-30BB	100.4	400	300	126.5	1.99
FCH10-40-40GS	FCH10-40-40BB	100.4	400	400	126.5	2.48

FCH cross-section view

■ Drawings below are reference examples only.
DXF/DWG/PDF drawings available on our website.

FCH series

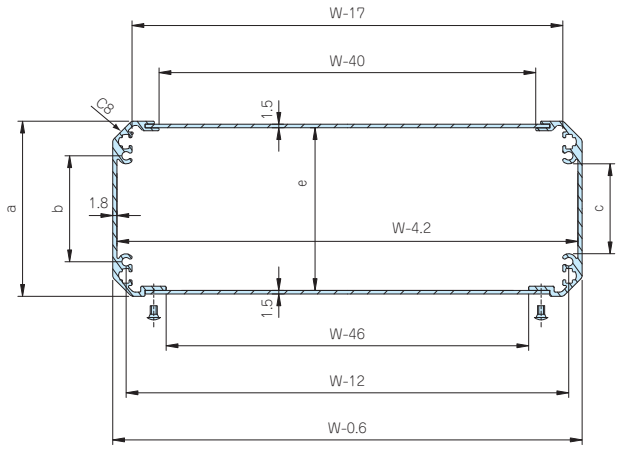

Box height	a	b	c	e
75.4	74.4	45	38.2	69
100.4	99.4	70	63.2	94

FC-BK series BLIND PLUG

■ Spare / Replacement bling plug for FC • FCW series.

FC-BK drawings

■ DXF/DWG/PDF drawings available on our website.

FC-BK-S□ (FC4 models)

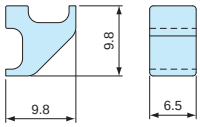

FC-BK-□ (Other FC models • FCW series)

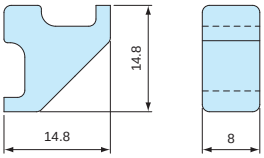

Product no.	Material	Color	Pack of
FC-BK-SG	Elastomer	Light gray	4
FC-BK-SB	Elastomer	Black	4
FC-BK-G	Elastomer	Light gray	4
FC-BK-B	Elastomer	Black	4

FW series HINGE for FCW

■ Spare / Replacement hinge for FCW series.

FW drawings

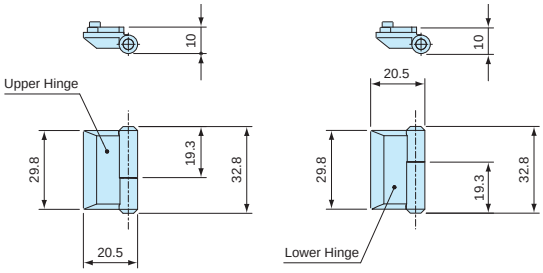

Product no.	Material	Color / Finish	Pack of
FW-2S	Diecast zinc	Silver / Painted	1 set (Upper/Lower)

PH-88 series FLAT HANDLE for FCW

■ Spare / Replacement flat handle for FCW series.

PH-88 drawings

■ DXF/DWG/PDF drawings available on our website.

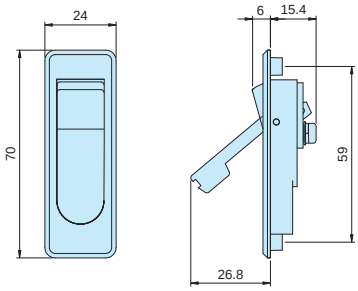

Normal type (without Key)

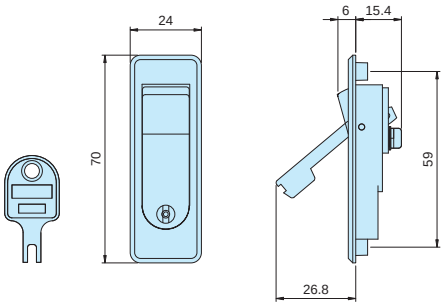

Key-lock type (with Key)

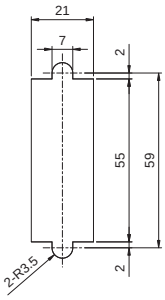

Hole layout
for mounting

Product no.	Key	Material	Color / Finish
PH-88A-2S	Without	Diecast zinc	Silver / Painted
PH-88 -2S	With	Diecast zinc	Silver / Painted

FCC series MOUNTING PLATE for FC • FCW

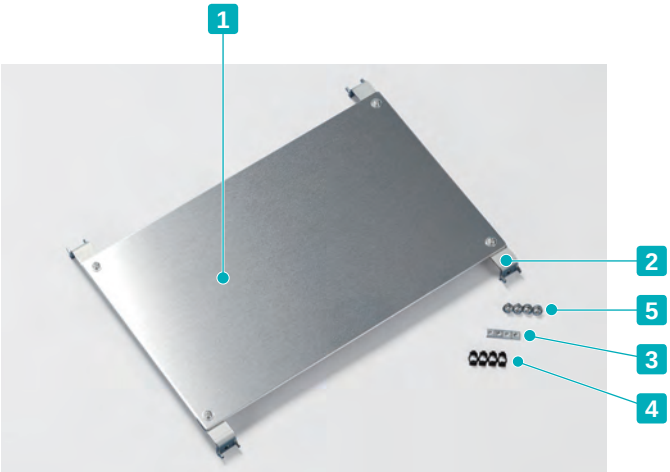

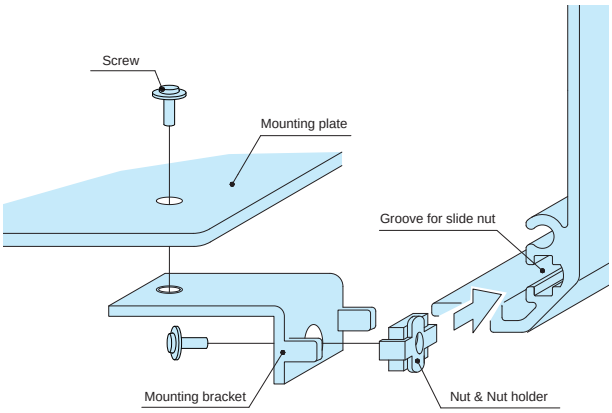

- The mounting bracket comes in 2 different height versions, 12mm and 22mm.
- Use 22mm height version when set on the open/close panel side of FCW series.
- Not suitable for FC4 (H = 37.9mm)
- Mounting brackets (FCK) are included with FCC series.

How to assemble

①Slide a M3 nut and nut holder into the groove on the frame.

②Screw the mounting bracket into the nut holder.

③Screw the mounting plate onto the mounting bracket.

FCC drawings

For box size (W x D or D x W) 100 x 100mm to 350 x 300mm

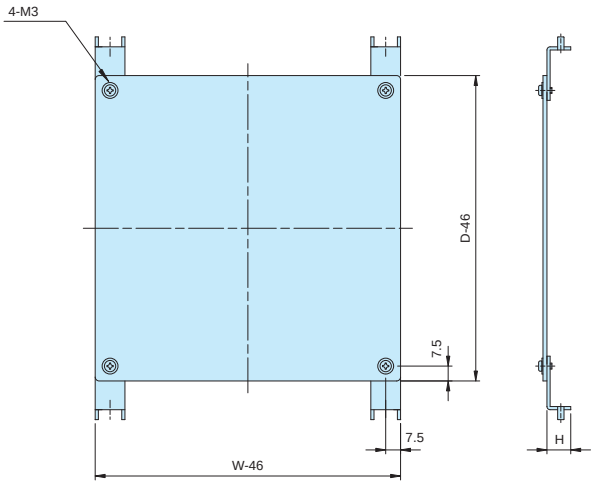

For box size (W x D or D x W) 400/500/600 x 200/250/300 mm

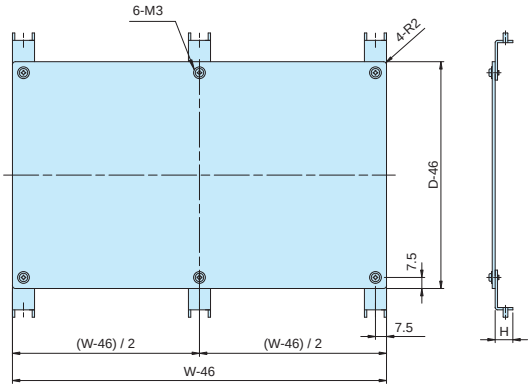

Components

No.	Part name	Material	Color / Finish
1	Mounting plate	Aluminium A1050P t=2.0	Unfinished
2	Mounting bracket	Steel SECC t=1.6	Zinc coated
3	M3 nut	Steel SPCC t=1.6	Trivalent chromate
4	Nut holder	POM	Black
5	Screw M3-6 pan head	Steel	Trivalent chromate

Product no. / Dimensions

Product no.	H	Box WxD or DxW	Product no.	H	Box WxD or DxW
FCC10-10-1	12	100×100	FCC10-10-2	22	100×100
FCC15-10-1	12	150×100	FCC15-10-2	22	150×100
FCC15-15-1	12	150×150	FCC15-15-2	22	150×150
FCC20-10-1	12	200×100	FCC20-10-2	22	200×100
FCC20-15-1	12	200×150	FCC20-15-2	22	200×150
FCC20-20-1	12	200×200	FCC20-20-2	22	200×200
FCC25-15-1	12	250×150	FCC25-15-2	22	250×150
FCC25-20-1	12	250×200	FCC25-20-2	22	250×200
FCC25-25-1	12	250×250	FCC25-25-2	22	250×250
FCC30-15-1	12	300×150	FCC30-15-2	22	300×150
FCC30-20-1	12	300×200	FCC30-20-2	22	300×200
FCC30-25-1	12	300×250	FCC30-25-2	22	300×250
FCC30-30-1	12	300×300	FCC30-30-2	22	300×300
FCC35-20-1	12	350×200	FCC35-20-2	22	350×200
FCC35-25-1	12	350×250	FCC35-25-2	22	350×250
FCC35-30-1	12	350×300	FCC35-30-2	22	350×300

Included screws: M3-6 pan head trivalent chromate with flat washer x 8 pcs

Product no. / Dimensions

Product no.	H	Box WxD or DxW	Product no.	H	Box WxD or DxW
FCC40-20-1	12	400×200	FCC40-20-2	22	400×200
FCC40-25-1	12	400×250	FCC40-25-2	22	400×250
FCC40-30-1	12	400×300	FCC40-30-2	22	400×300
FCC50-25-1	12	500×250	FCC50-25-2	22	500×250
FCC50-30-1	12	500×300	FCC50-30-2	22	500×300
FCC60-30-1	12	600×300	FCC60-30-2	22	600×300

Included screws: M3-6 pan head trivalent chromate with flat washer x 12 pcs

- DXF/DWG/PDF/STP drawings available on our website.

FCC drawings

■ DXF/DWG/PDF/STP drawings available on our website.

For box size (W x D or D x W) 400/500/600 x 400mm

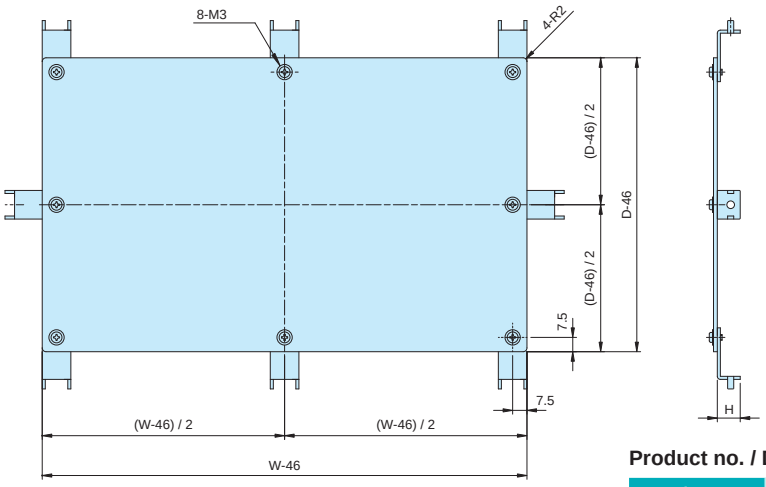

Product no. / Dimensions

Product no.	H	Box WxD or DxW	Product no.	H	Box WxD or DxW
FCC40-40-1	12	400×400	FCC40-40-2	22	400×400
FCC50-40-1	12	500×400	FCC50-40-2	22	500×400
FCC60-40-1	12	600×400	FCC60-40-2	22	600×400

Included screws: M3-6 pan head trivalent chromate with flat washer x 16 pcs

Accessories (Optional parts)

FCK series MOUNTING BRACKET

FCK drawings

■ DXF/DWG/PDF drawings available on our website.

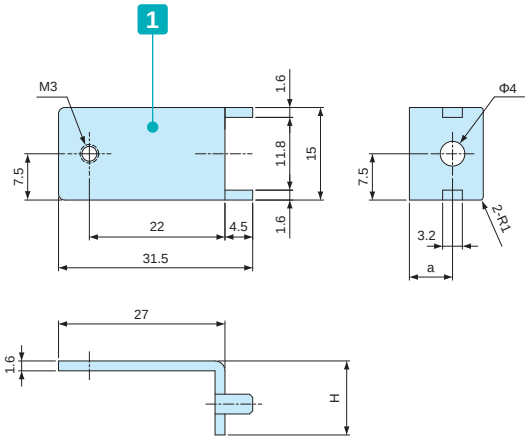

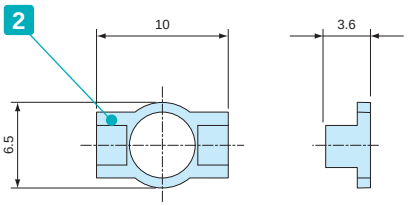

Nut holder

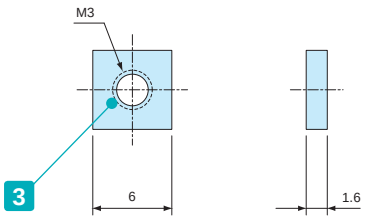

Nut

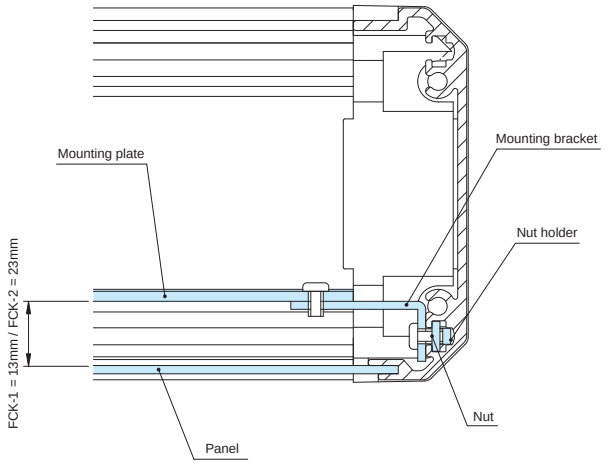

- 2 mounting brackets for PCB or DIN-Rail.
- FCK mounting bracket comes with FCC mounting plate. Additional FCK is not necessary when purchasing FCC series.
- Not suitable for FC4 (H = 37.9mm).

Components

No.	Part name	Material	Color / Finish
1	Mounting bracket	Steel SECC t=1.6	Zinc coated
2	Nut holder	POM	Black
3	M3 nut	Steel SPCC t=1.6	Trivalent chromate

Product no. / Dimensions

Product no.	H	a	Pack of
FCK-1	12	7	10
FCK-2	22	17	10

Included screws: M3-6 pan head trivalent chromate with flat washer x 20 pcs

MR SERIES SLOTTED RAISED COUNTERSUNK TORX SCREW

- For use with top / bottom cover.
- Recommended for aesthetic purposes, or for tampering resistance.
- Requires the use of a specialized screwdriver.

Product no. / Dimensions

Product no.	M	L	TORX head no.	Material	Color / Finish	Pack of
MR3-5ZS	3	5	T10	Steel	Nickel plated	20
MR3-5ZB	3	5	T10	Steel	Black trivalent chromate	20

FDR SERIES DIN-RAIL

- FCK mounting bracket is required for installation.
- Not suitable for FC4 (H = 37.9mm).

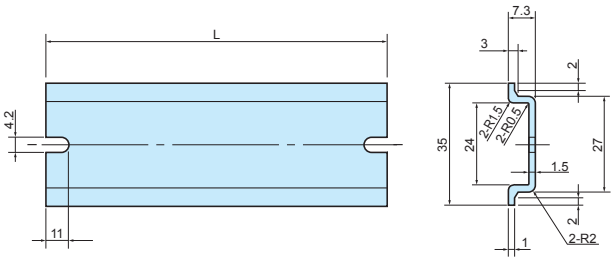

Components

Material	Color / Finish
Aluminium A6063S-T5	Silver / Anodized

Product no. / Dimensions

Product no.	L	Box length
FDR- 50	50	100
FDR-100	100	150
FDR-150	150	200
FDR-205	205	250
FDR-249	249	300
FDR-300	300	350
FDR-350	350	400
FDR-450	450	500
FDR-550	550	600

CH SERIES ALUMINIUM CONTROL BOX

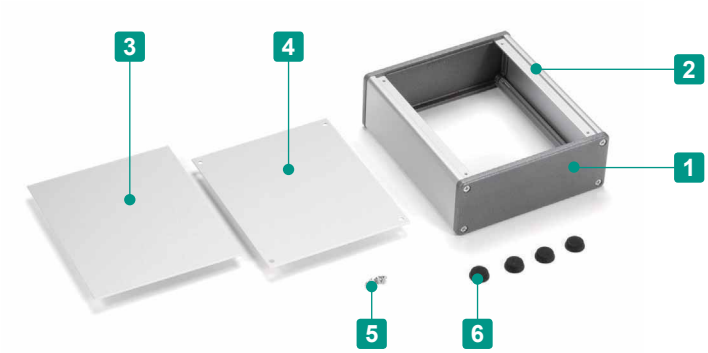

- Simple and strong construction with diecast and extruded aluminium material.
- Durable powder-coated side plate.
- Both the slide and screwed panel can be utilized as the front panel.
- 2 color types available.

Components

No.	Part name	Pcs	Material	Color / Finish
1	Side plate	2	Diecast aluminium ADC12	Black • Metallic gray / Powder coated
2	Frame	2	Extruded aluminium A6063S-T5	Black / Anodized • Silver / Hairline brushed & Anodized
3	Slide panel	1	Aluminium A1100P • A1050P	Black / Painted • Silver / Hairline brushed & Anodized
4	Screwed panel	1	Aluminium A1100P • A1050P	Black / Painted • Silver / Hairline brushed & Anodized
5	Screw	1 set	Steel	Black trivalent chromate • Nickel plated
6	Rubber feet	4	Synthetic rubber	Black

■ Note: panels are covered with a protective film on one side. Remove before assembly.

※CH7 models come with copper plated screws for grounding.

APPLICATION EXAMPLE

WAVEFORM ANALYZER

Product by Graviton Inc. (Japan)

CNC MACHINING CENTER CONTROL UNIT

Product by FNS Co. Ltd. (Japan)

CH dimensions

■ Drawings below are reference examples only.
DXF/DWG/PDF drawings available on our website.

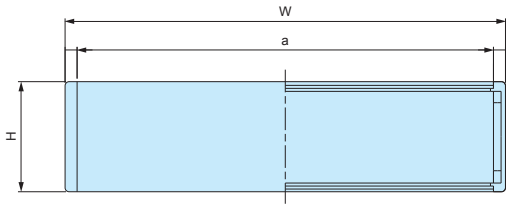

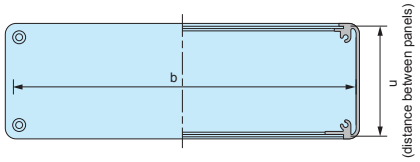

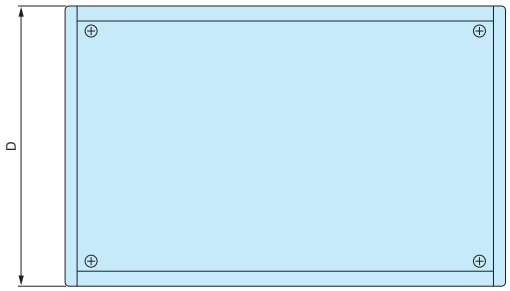

Included screws

CH4 • CH6 models
M3-5 Slotted raised countersunk • Black trivalent chromate x 4 pcs
M3-5 Slotted raised countersunk • Nickel plated x 4 pcs
M3-10 countersunk • Black trivalent chromate x 8 pcs
M3-10 countersunk • Nickel plated x 8 pcs

CH7 • CH8 models
M3-5 Slotted raised countersunk • Black trivalent chromate x 4 pcs
M3-5 Slotted raised countersunk • Nickel plated x 4 pcs
M4-12 countersunk • Black trivalent chromate x 8 pcs
M4-12 countersunk • Nickel plated x 8 pcs

Product no. / Dimensions

Product no.		W	H	D	a	b	u	Weight (kg)
● Black (BBP)	● Gray•Silver(GSP)							
CH4- 7-10BBP	CH4- 7-10GSP	70	36.5	100.5	60	96.4	30.5	0.15
CH4-10-10BBP	CH4-10-10GSP	100	36.5	100.5	90	96.4	30.5	0.20
CH4-15-10BBP	CH4-15-10GSP	150	36.5	100.5	140	96.4	30.5	0.27
CH4-20-10BBP	CH4-20-10GSP	200	36.5	100.5	190	96.4	30.5	0.35
CH4-25-10BBP	CH4-25-10GSP	250	36.5	100.5	240	96.4	30.5	0.42
CH6- 8-14BBP	CH6- 8-14GSP	80	55	140.7	68	135.7	48.8	0.25
CH6-11-14BBP	CH6-11-14GSP	110	55	140.7	98	135.7	48.8	0.31
CH6-16-14BBP	CH6-16-14GSP	160	55	140.7	148	135.7	48.8	0.41
CH6-22-14BBP	CH6-22-14GSP	220	55	140.7	208	135.7	48.8	0.53
CH6-29-14BBP	CH6-29-14GSP	290	55	140.7	278	135.7	48.8	0.67

Product no.		W	H	D	a	b	u	Weight (kg)
● Black (BBP)	● Gray•Silver(GSP)							
CH7- 9-17BBP	CH7- 9-17GSP	90	65.5	168.5	74	164.4	58	0.50
CH7-12-17BBP	CH7-12-17GSP	120	65.5	168.5	104	164.4	58	0.58
CH7-17-17BBP	CH7-17-17GSP	170	65.5	168.5	154	164.4	58	0.72
CH7-25-17BBP	CH7-25-17GSP	250	65.5	168.5	234	164.4	58	0.94
CH7-33-17BBP	CH7-33-17GSP	330	65.5	168.5	314	164.4	58	1.16
CH8-15-23BBP	CH8-15-23GSP	150	75	230.6	134	226.1	68.8	0.74
CH8-25-23BBP	CH8-25-23GSP	250	75	230.6	234	226.1	68.8	1.06
CH8-33-23BBP	CH8-33-23GSP	330	75	230.6	314	226.1	68.8	1.31
CH8-43-23BBP	CH8-43-23GSP	430	75	230.6	414	226.1	68.8	1.63

Accessories (Optional parts)

MR SERIES TORX SCREW

■ Material / Finish : Steel / Nickel plated
■ TORX screw set for 1 unit.
■ Recommended for aesthetic purposes, or for tamper-resistance.
■ Requires the use of a specialized screwdriver.

Suitable Enclosures

Product no.	Suitable enclosures
MR-3CS	CH4 and CH6 models
MR-4CS	CH7 and CH8 models

Product no. / Dimensions

Product no.	Included screws	TORX head no.
MR-3CS	M3-10 countersunk x 8 pcs • M3-5 Slotted raised countersunk x 4 pcs	T10 (M3)
MR-4CS	M4-12 countersunk x 8 pcs • M3-5 Slotted raised countersunk x 4 pcs	T10 (M3) • T20 (M4)

TAKACHI

TAKACHI ELECTRONICS ENCLOSURE CO., LTD.

3-21-16 Higashi-ryoke, Kawaguchi-shi, Saitama, 332-0003 JAPAN

Tel. +81-48-222-5409 / Fax. +81-48-222-7652

January 30, 2023

NOTICE

Material, Color, and Color Code Change

Affected series and changes:

■ **Material Change :** **MY series**

Holder	: PC + ABS	→ ABS
Grip + Blind Cap	: PP + Elastomer	→ Elastomer

■ **Color Change :** **MS, MO, MSN, MON, MSY, MOY, MSR, MOR, MN, MY, MSM series**

■ **Color Code Change :** **MS, MO, MSN, MON, MSY, MOY, MSR, MOR series**

Click below illustrations to check Current (Old) and New colors on your browser.

Current (Old) Color Code : G | **New Color Code : GS**

MS・MO series

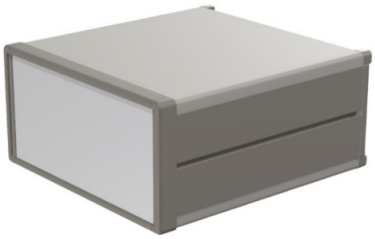

MS・MO series

MSN・MON series

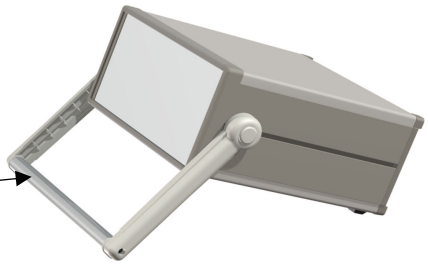

MN series
Tip-Up Handle

MSN・MON series

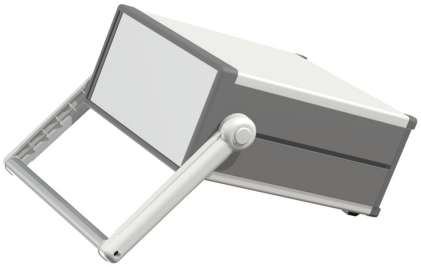

MSY・MOY series

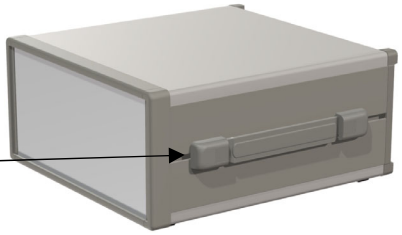

MY series
Carrying Handle

MSY・MOY series

MSR・MOR series

MSM series
Rack Mount Bracket

MSR・MOR series

■ Functionality: No changes to functionality, size / dimensions, or finish.

■ Purpose: To ensure consistent quality throughout via streamlined supply chain and materials.

■ Period: 2023 July.

■ No changes to pricing.

Thank you for your understanding.

For more information, kindly contact us at: sales@takachi-el.co.jp

MS series APPLICATION EXAMPLE

The desktop metal type MS series enclosure is suitable for use as measuring instruments, testing equipment, power supply controller, etc.
A wide variety of 3 different colors and 176 different sizes are available.

4 Distinct Models for Different Applications

Standard Desktop Model - MS series

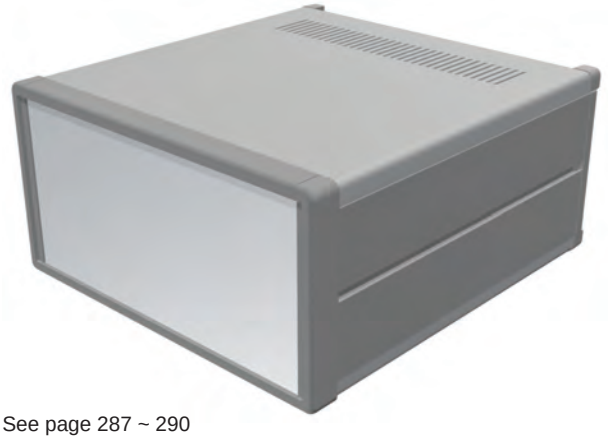

See page 287 ~ 290

Tip-Up Handle Model - MSN series

See website

Carrying Handle Model - MSY series

See website

19” Rack Mount Model - MSR series

See website

APPLICATION EXAMPLES

EDDY Current Flaw Indicator Product by Micro-Fix (Japan)

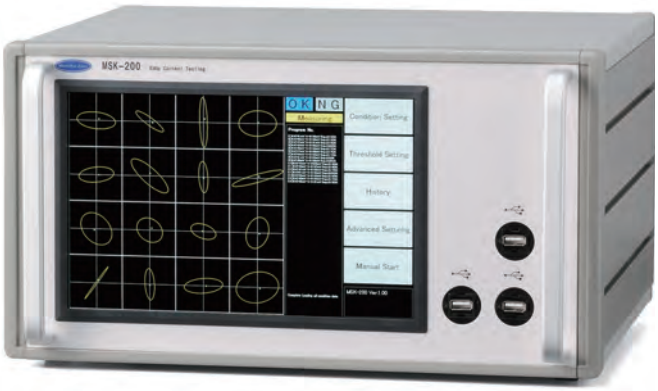

Multichannel I/V Converter Amplifier

Product by TURTLE INDUSTRY (Japan)

Reference Signal Distributor

Product by Freqtime (Japan)

Embedded PCB Checker

Product by KYOSAITECHNOS (Japan)

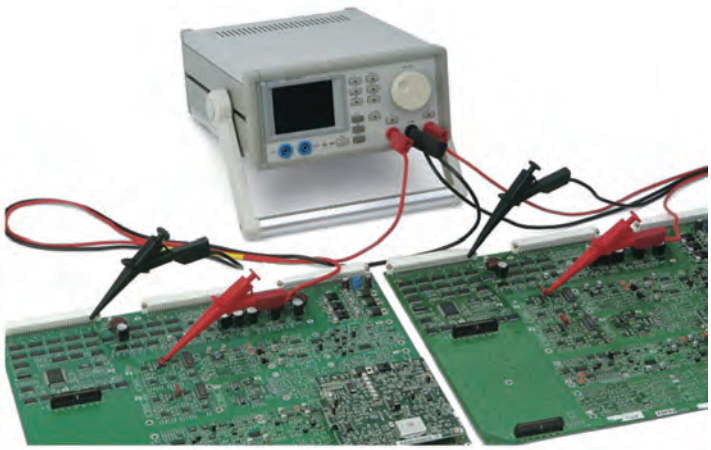

Precision Programmable Resistance Box / RTD Simulator

Product by Alpha Electronics (Japan)

Handy Probe EDDY Resistance Meter

Product by NAPSON (Japan)

Quenching Depth Indicator Product by Denshijiki Industry (Japan)

Wide Band Power Amplifier Product by RAD (Japan)

Diagnostic Device Product by Cors (Japan)

Solar Power Analyzer Product by SPD Laboratory (Japan)

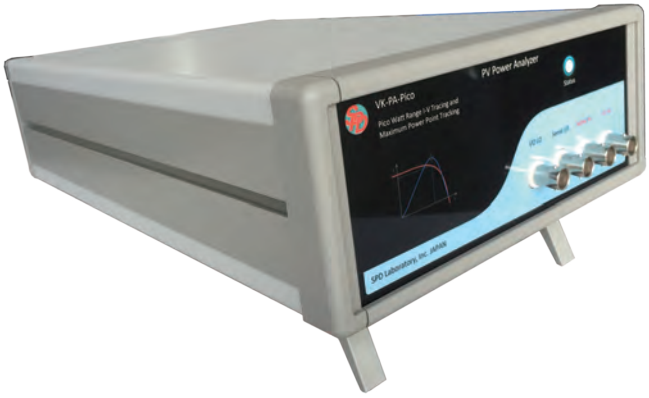

Portable PV Simulator Product by Nippon Kernel System (Japan)

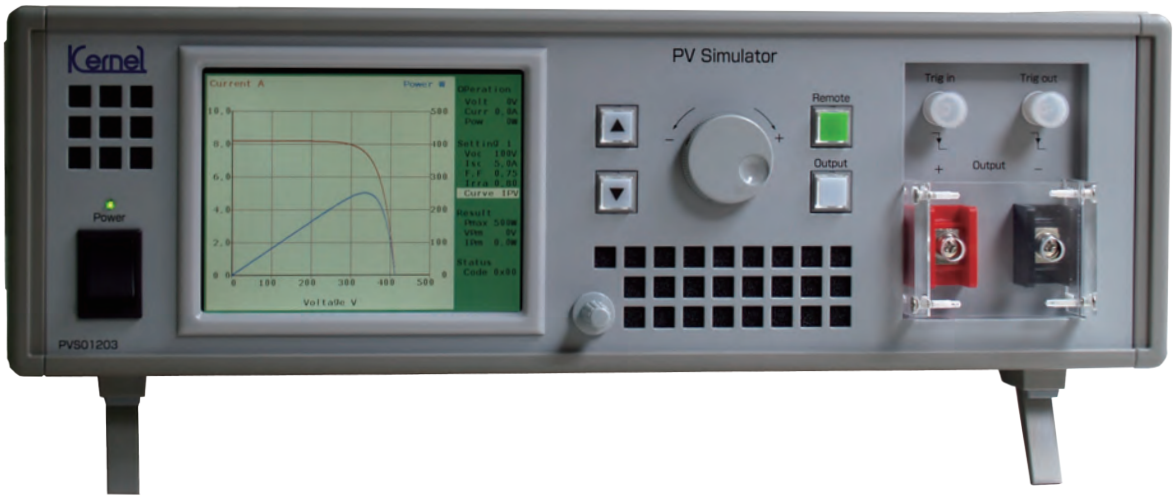

Fiber Optic Thermometer Product by Anritsu Meter (Japan)

Precision Platinum Resistance Thermometer

Product by Anritsu Meter (Japan)

Optical Small Internal Diameter Meter

Product by DAI-ICHI SOKUHAN (Japan)

Seismic Monitor Product by Tokyo Sokushin (Japan)

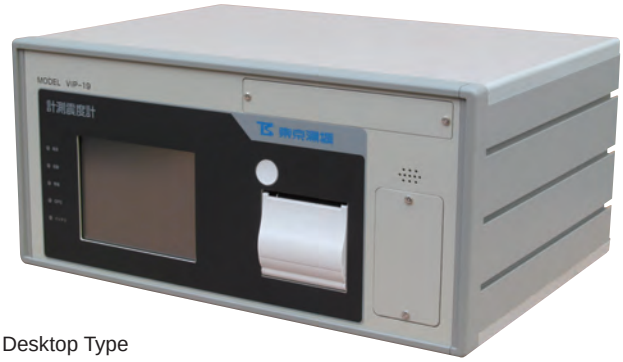

Desktop Type

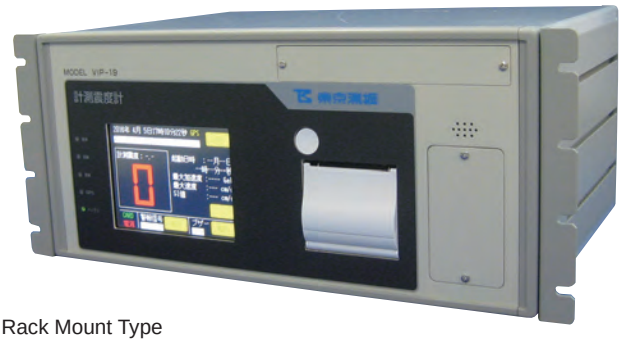

Rack Mount Type

MS series DESKTOP ENCLOSURE

- Available in 3 different colors and 176 different sizes.
- Screws are hidden out of view for a sophisticated and elegant look.
- Suitable for use as measuring instruments, testing equipment, power supply controller, etc.

MSN series
Tip-Up Handle Model

MSY series
Carrying Handle Model

MSR series
19" Rack Mount Model

Variations of MS series, MSN, MSY and MSR series are also available. See website for more details.

Assembly drawings

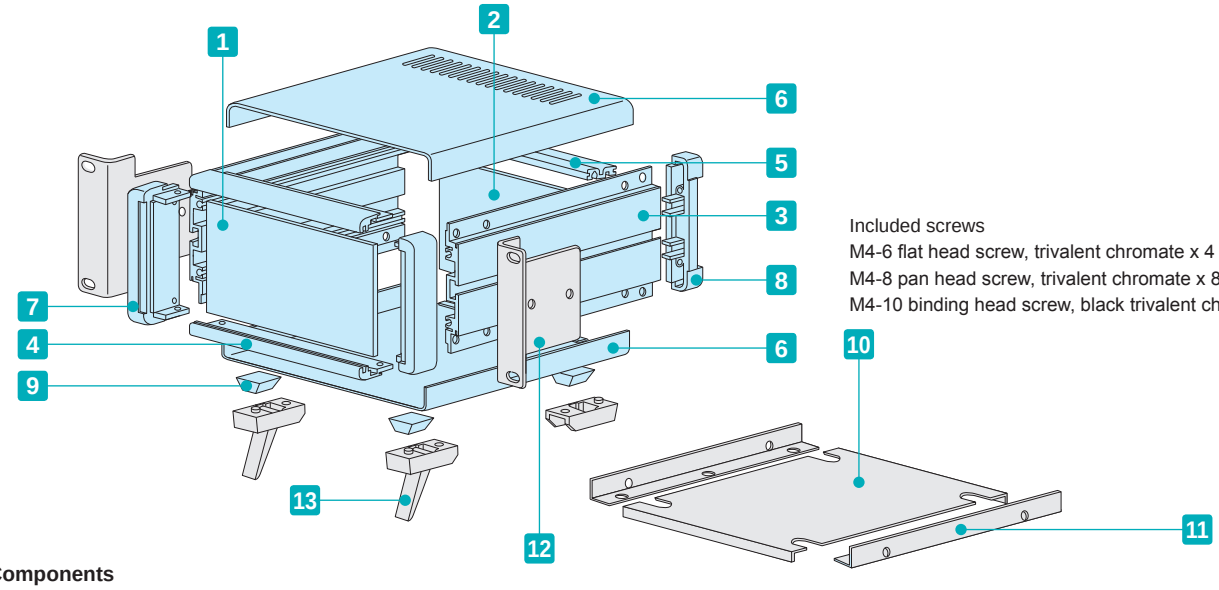

Included screws
M4-6 flat head screw, trivalent chromate x 4 pcs
M4-8 pan head screw, trivalent chromate x 8 pcs
M4-10 binding head screw, black trivalent chromate x 4 pcs

Components

No.	Part name	Pcs	Material	Color / Finish
1	Front panel	1	Aluminium A1100P t=2.0	Silver • Black / Anodized
2	Rear panel	1	Aluminium A1100P t=2.0	Silver • Black / Anodized
3	Side frame	2	Extruded aluminium A6063S-T5	Gray • Black / Painted
4	Front frame	2	Extruded aluminium A6063S-T5	Gray • Black / Painted
5	Rear frame	2	Extruded aluminium A6063S-T5	Silver / Anodized
6	Top • Bottom cover	1 each	Steel SPCC t=1.0	Light gray • Black / Painted
7	Corner block	2	Diecast aluminium ADC12	Gray • Black / Painted
8	Rear feet	2	ABS UL94V-0	Gray • Black
9	Rubber feet	4	Polyurethane	Black

■ Front • Rear panels are covered with a protective film on one side.

Accessories (Optional parts)

10 Mounting plate MSC series
See page 291

11 L-bracket MSCL series
See page 291

12 Rack mounting MSM series
See website

13 Tilt leg TL series
See page 292

Cable hook CBF series
See page 292

MS dimensions

■ DXF/DWG/PDF/STP drawings available on our website.

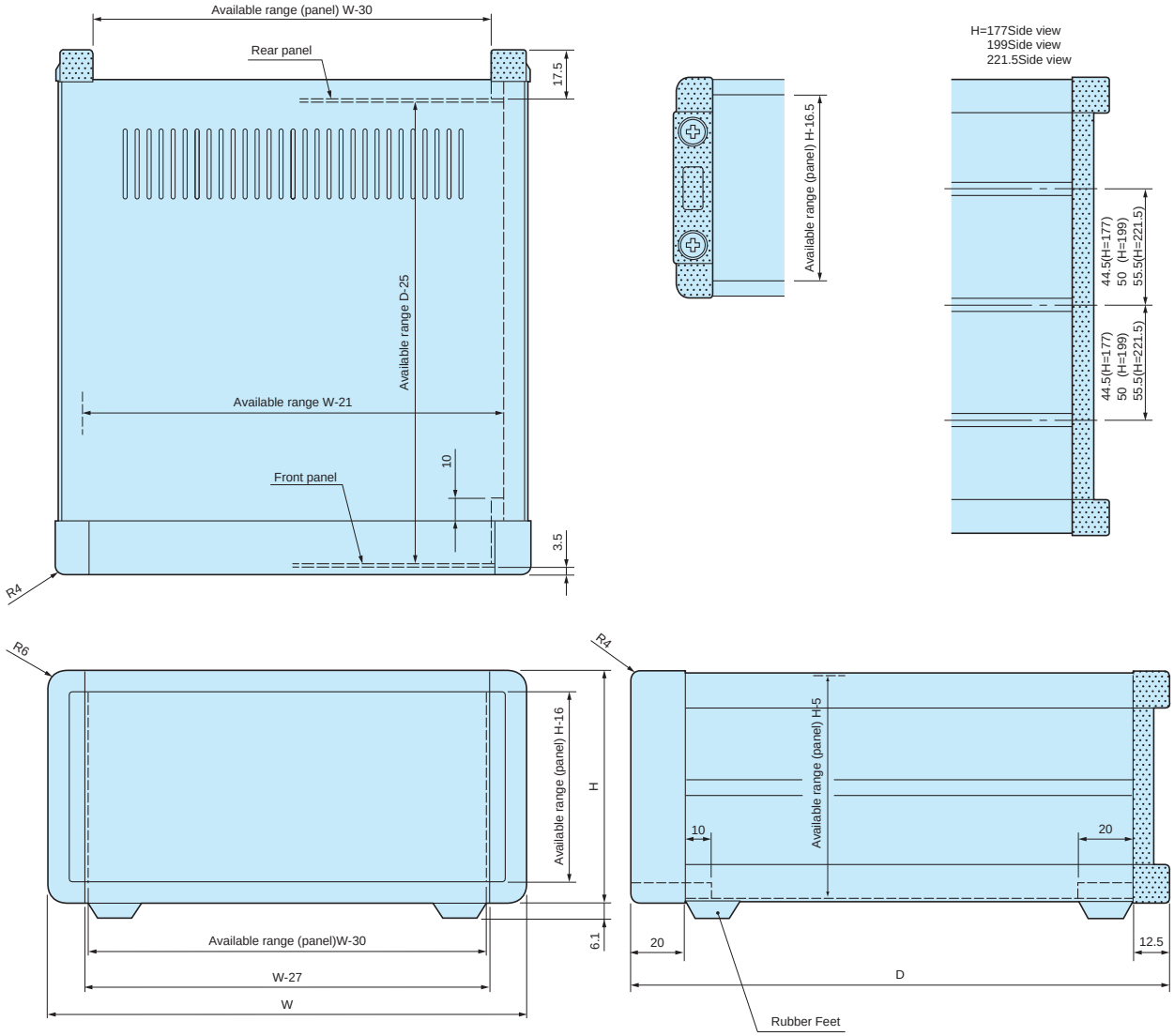

■ Top • Bottom cover of sizes 160x160, 160x230, 160x280, 210x160 do not have ventilation holes.

Color Type

■ Please suffix color code at the end of the product number.

G		B		BS	
Panel	Silver	Panel	Black	Panel	Silver
Top • Bottom cover	Light gray	Top • Bottom cover	Black	Top • Bottom cover	Black
Side frame	Gray	Side frame	Black	Side frame	Black

Product no. / Dimensions

Product no.	H	W	D	Weight (kg)
MS 66-16-16□	66	160	160	1.0
MS 66-16-23□	66	160	230	1.3
MS 66-16-28□	66	160	280	1.6
MS 66-21-16□	66	210	160	1.2
MS 66-21-23□	66	210	230	1.6
MS 66-21-28□	66	210	280	1.8
MS 66-21-35□	66	210	350	2.2
MS 66-26-23□	66	260	230	1.8
MS 66-26-28□	66	260	280	2.1
MS 66-26-35□	66	260	350	2.6
MS 66-32-23□	66	320	230	2.1
MS 66-32-28□	66	320	280	2.5
MS 66-32-35□	66	320	350	3.0
MS 66-32-45□	66	320	450	3.7
MS 66-37-23□	66	370	230	2.4
MS 66-37-28□	66	370	280	2.8
MS 66-37-35□	66	370	350	3.3
MS 66-37-45□	66	370	450	4.1
MS 66-43-23□	66	430	230	2.7
MS 66-43-28□	66	430	280	3.1
MS 66-43-35□	66	430	350	3.7
MS 66-43-45□	66	430	450	4.6
MS 88-16-16□	88	160	160	1.1
MS 88-16-23□	88	160	230	1.5
MS 88-16-28□	88	160	280	1.7
MS 88-21-16□	88	210	160	1.3
MS 88-21-23□	88	210	230	1.8
MS 88-21-28□	88	210	280	2.1
MS 88-21-35□	88	210	350	2.5
MS 88-26-23□	88	260	230	2.0
MS 88-26-28□	88	260	280	2.5
MS 88-26-35□	88	260	350	2.8
MS 88-32-23□	88	320	230	2.3
MS 88-32-28□	88	320	280	2.8
MS 88-32-35□	88	320	350	3.2
MS 88-32-45□	88	320	450	4.0
MS 88-37-23□	88	370	230	2.6
MS 88-37-28□	88	370	280	3.0
MS 88-37-35□	88	370	350	3.6
MS 88-37-45□	88	370	450	4.4
MS 88-43-23□	88	430	230	2.9
MS 88-43-28□	88	430	280	3.4
MS 88-43-35□	88	430	350	4.0
MS 88-43-45□	88	430	450	5.0

Product no.	H	W	D	Weight (kg)
MS 99-16-16□	99	160	160	1.1
MS 99-16-23□	99	160	230	1.5
MS 99-16-28□	99	160	280	1.8
MS 99-21-16□	99	210	160	1.4
MS 99-21-23□	99	210	230	1.8
MS 99-21-28□	99	210	280	2.1
MS 99-21-35□	99	210	350	2.5
MS 99-26-23□	99	260	230	2.0
MS 99-26-28□	99	260	280	2.4
MS 99-26-35□	99	260	350	2.8
MS 99-32-23□	99	320	230	2.4
MS 99-32-28□	99	320	280	2.8
MS 99-32-35□	99	320	350	3.3
MS 99-32-45□	99	320	450	4.0
MS 99-37-23□	99	370	230	2.6
MS 99-37-28□	99	370	280	3.0
MS 99-37-35□	99	370	350	3.6
MS 99-37-45□	99	370	450	4.5
MS 99-43-23□	99	430	230	3.0
MS 99-43-28□	99	430	280	3.4
MS 99-43-35□	99	430	350	4.1
MS 99-43-45□	99	430	450	5.0
MS133-16-16□	132.5	160	160	1.3
MS133-16-23□	132.5	160	230	1.7
MS133-16-28□	132.5	160	280	2.0
MS133-21-16□	132.5	210	160	1.6
MS133-21-23□	132.5	210	230	2.1
MS133-21-28□	132.5	210	280	2.4
MS133-21-35□	132.5	210	350	2.9
MS133-26-23□	132.5	260	230	2.4
MS133-26-28□	132.5	260	280	2.8
MS133-26-35□	132.5	260	350	3.3
MS133-32-23□	132.5	320	230	2.7
MS133-32-28□	132.5	320	280	3.2
MS133-32-35□	132.5	320	350	3.7
MS133-32-45□	132.5	320	450	4.5
MS133-37-23□	132.5	370	230	3.0
MS133-37-28□	132.5	370	280	3.5
MS133-37-35□	132.5	370	350	4.1
MS133-37-45□	132.5	370	450	5.0
MS133-43-23□	132.5	430	230	3.4
MS133-43-28□	132.5	430	280	3.9
MS133-43-35□	132.5	430	350	4.6
MS133-43-45□	132.5	430	450	5.6

Product no. / Dimensions

Product no.	H	W	D	Weight (kg)
MS149-16-16□	149	160	160	1.4
MS149-16-23□	149	160	230	1.8
MS149-16-28□	149	160	280	2.1
MS149-21-16□	149	210	160	1.6
MS149-21-23□	149	210	230	2.1
MS149-21-28□	149	210	280	2.4
MS149-21-35□	149	210	350	2.9
MS149-26-23□	149	260	230	2.4
MS149-26-28□	149	260	280	2.8
MS149-26-35□	149	260	350	3.3
MS149-32-23□	149	320	230	2.7
MS149-32-28□	149	320	280	3.2
MS149-32-35□	149	320	350	3.8
MS149-32-45□	149	320	450	4.6
MS149-37-23□	149	370	230	3.0
MS149-37-28□	149	370	280	3.5
MS149-37-35□	149	370	350	4.1
MS149-37-45□	149	370	450	5.1
MS149-43-23□	149	430	230	3.4
MS149-43-28□	149	430	280	3.9
MS149-43-35□	149	430	350	4.6
MS149-43-45□	149	430	450	5.6
MS177-16-16□	177	160	160	1.6
MS177-16-23□	177	160	230	2.2
MS177-16-28□	177	160	280	2.5
MS177-21-16□	177	210	160	1.9
MS177-21-23□	177	210	230	2.7
MS177-21-28□	177	210	280	3.1
MS177-21-35□	177	210	350	3.6
MS177-26-23□	177	260	230	3.0
MS177-26-28□	177	260	280	3.4
MS177-26-35□	177	260	350	4.0
MS177-32-23□	177	320	230	3.3
MS177-32-28□	177	320	280	3.9
MS177-32-35□	177	320	350	4.5
MS177-32-45□	177	320	450	5.5
MS177-37-23□	177	370	230	3.6
MS177-37-28□	177	370	280	4.2
MS177-37-35□	177	370	350	4.9
MS177-37-45□	177	370	450	6.0
MS177-43-23□	177	430	230	4.0
MS177-43-28□	177	430	280	4.6
MS177-43-35□	177	430	350	5.4
MS177-43-45□	177	430	450	6.6

Product no.	H	W	D	Weight (kg)
MS199-16-16□	199	160	160	1.9
MS199-16-23□	199	160	230	2.4
MS199-16-28□	199	160	280	2.7
MS199-21-16□	199	210	160	2.1
MS199-21-23□	199	210	230	2.7
MS199-21-28□	199	210	280	3.1
MS199-21-35□	199	210	350	3.7
MS199-26-23□	199	260	230	3.1
MS199-26-28□	199	260	280	3.5
MS199-26-35□	199	260	350	4.1
MS199-32-23□	199	320	230	3.4
MS199-32-28□	199	320	280	3.9
MS199-32-35□	199	320	350	4.7
MS199-32-45□	199	320	450	5.7
MS199-37-23□	199	370	230	3.8
MS199-37-28□	199	370	280	4.3
MS199-37-35□	199	370	350	5.1
MS199-37-45□	199	370	450	6.0
MS199-43-23□	199	430	230	4.2
MS199-43-28□	199	430	280	4.8
MS199-43-35□	199	430	350	5.6
MS199-43-45□	199	430	450	6.9
MS222-16-16□	222	160	160	2.0
MS222-16-23□	222	160	230	2.5
MS222-16-28□	222	160	280	2.8
MS222-21-16□	222	210	160	2.2
MS222-21-23□	222	210	230	2.8
MS222-21-28□	222	210	280	3.2
MS222-21-35□	222	210	350	3.8
MS222-26-23□	222	260	230	3.2
MS222-26-28□	222	260	280	3.6
MS222-26-35□	222	260	350	4.3
MS222-32-23□	222	320	230	3.6
MS222-32-28□	222	320	280	4.1
MS222-32-35□	222	320	350	4.9
MS222-32-45□	222	320	450	6.0
MS222-37-23□	222	370	230	3.9
MS222-37-28□	222	370	280	4.5
MS222-37-35□	222	370	350	5.3
MS222-37-45□	222	370	450	6.4
MS222-43-23□	222	430	230	4.4
MS222-43-28□	222	430	280	5.0
MS222-43-35□	222	430	350	5.9
MS222-43-45□	222	430	450	7.2

MSN SERIES DESKTOP ENCLOSURE with STAND HANDLE

- Available in 3 different colors and 176 different sizes.
- Stand handle can be shifted and locked at 30° intervals.
- Maximum load support of 25kg.

Assembly drawings

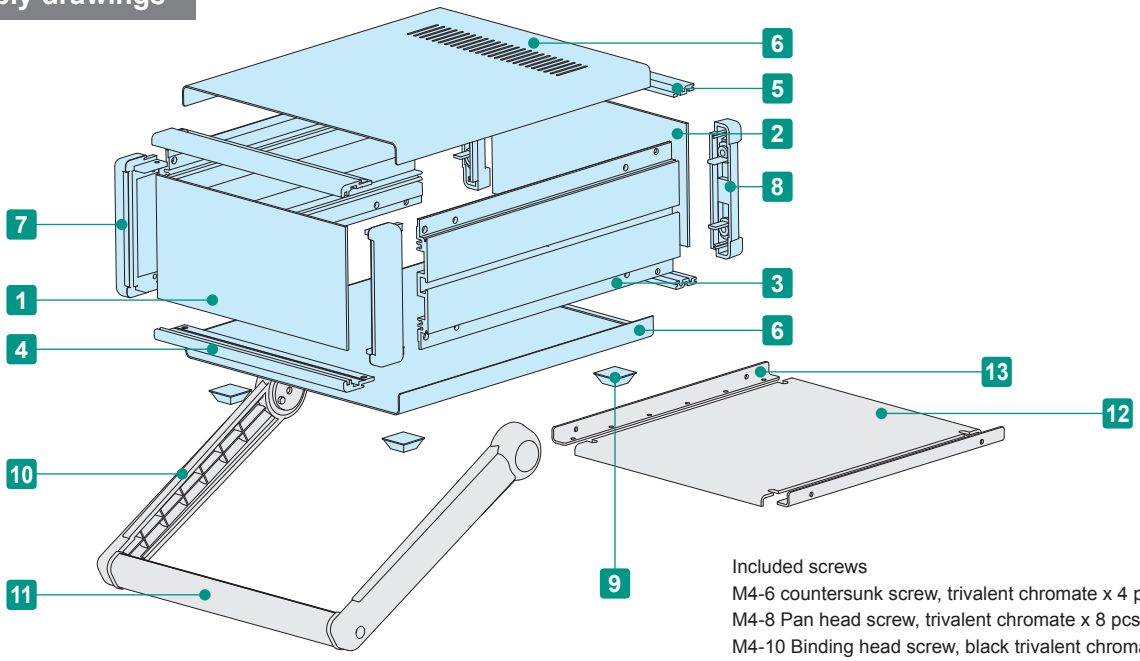

Included screws
M4-6 countersunk screw, trivalent chromate x 4 pcs
M4-8 Pan head screw, trivalent chromate x 8 pcs
M4-10 Binding head screw, black trivalent chromate x 4 pcs

Components

No.	Part name		Pcs	Material	Color / Finish
1	Front panel		1	Aluminium A1050P t=2.0	Silver • Black / Hairline brushed & Anodized
2	Rear panel		1	Aluminium A1050P t=2.0	Silver • Black / Anodized
3	Side frame		2	Extruded aluminium A6063S-T5	Gray • Black / Painted
4	Front frame		2	Extruded aluminium A6063S-T5	Gray • Black / Painted
5	Rear frame		2	Extruded aluminium A6063S-T5	Silver / Anodized
6	Top • Bottom cover		1 each	Steel SPCC t=1.0	Light gray • Black / Painted
7	Corner block		2	Diecast aluminium ADC12	Gray • Black / Painted
8	Rear feet		2	ABS UL94V-0	Gray • Black
9	Rubber feet		4	Polyurethane	Black
10	Stand handle	Bracket	2	ABS UL94HB	Light gray • Black
11		Grip	1	Extruded aluminium A6063S-T5	Silver • Black

- Note: Front / rear panels are covered with a protective film on one side. Remove before assembly.

Accessories (Optional parts)

12 Mounting plate MSC series
See page MSC • MSCL-1

z L-bracket MSCL series
See page MSC • MSCL-1

Cable hook CBF series
See page TL • CBF-1

MSN dimensions

■ Drawings below are reference examples only.
DXF/DWG/PDF drawings available on our website.

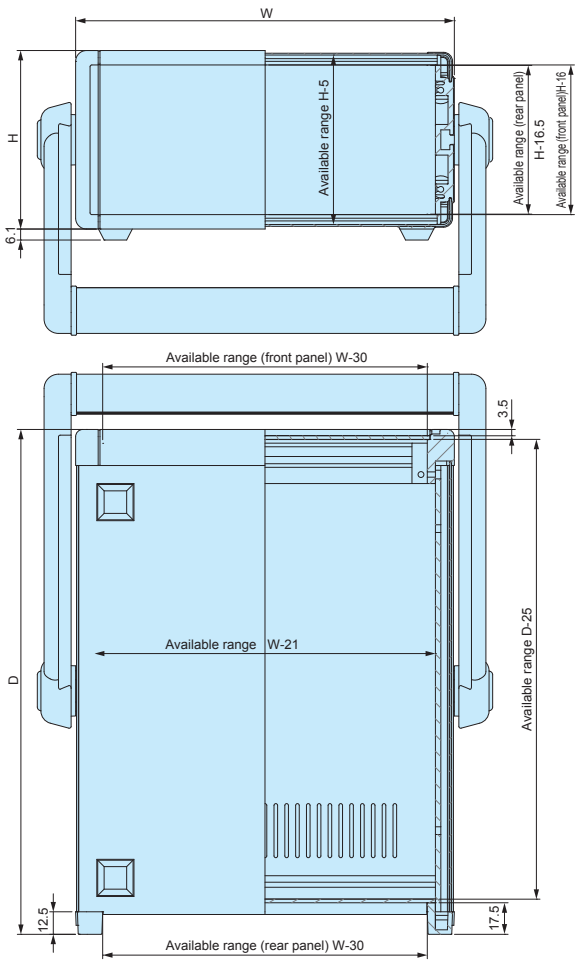

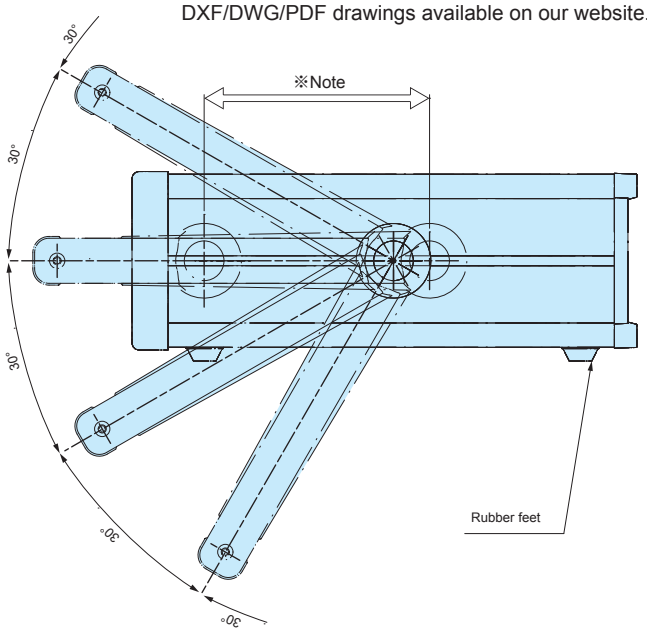

※ Note
Stand handle location can be freely affixed within denoted range.

■ Top • Bottom cover of sizes 160x160, 160x230, 160x280, 210x160 do not have ventilation holes.

Color Type

■ Please suffix color code at the end of the product number.

G		B		BS	
Panel	Silver	Panel	Black	Panel	Silver
Top • Bottom cover	Light gray	Top • Bottom cover	Black	Top • Bottom cover	Black
Side frame	Gray	Side frame	Black	Side frame	Black

Product no. / Dimensions

Product no.	H	W	D	Weight (kg)
MSN 66-16-16□	66	160	160	1.2
MSN 66-16-23□	66	160	230	1.5
MSN 66-16-28□	66	160	280	1.8
MSN 66-21-16□	66	210	160	1.4
MSN 66-21-23□	66	210	230	1.8
MSN 66-21-28□	66	210	280	2.1
MSN 66-21-35□	66	210	350	2.5
MSN 66-26-23□	66	260	230	2.1
MSN 66-26-28□	66	260	280	2.4
MSN 66-26-35□	66	260	350	2.9
MSN 66-32-23□	66	320	230	2.4
MSN 66-32-28□	66	320	280	2.8
MSN 66-32-35□	66	320	350	3.4
MSN 66-32-45□	66	320	450	4.1
MSN 66-37-23□	66	370	230	2.6
MSN 66-37-28□	66	370	280	3.1
MSN 66-37-35□	66	370	350	3.7
MSN 66-37-45□	66	370	450	4.4
MSN 66-43-23□	66	430	230	3.0
MSN 66-43-28□	66	430	280	3.5
MSN 66-43-35□	66	430	350	4.2
MSN 66-43-45□	66	430	450	5.2
MSN 88-16-16□	88	160	160	1.3
MSN 88-16-23□	88	160	230	1.6
MSN 88-16-28□	88	160	280	1.9
MSN 88-21-16□	88	210	160	1.5
MSN 88-21-23□	88	210	230	1.9
MSN 88-21-28□	88	210	280	2.3
MSN 88-21-35□	88	210	350	2.7
MSN 88-26-23□	88	260	230	2.3
MSN 88-26-28□	88	260	280	2.6
MSN 88-26-35□	88	260	350	3.1
MSN 88-32-23□	88	320	230	2.6
MSN 88-32-28□	88	320	280	3.0
MSN 88-32-35□	88	320	350	3.6
MSN 88-32-45□	88	320	450	4.4
MSN 88-37-23□	88	370	230	2.9
MSN 88-37-28□	88	370	280	3.3
MSN 88-37-35□	88	370	350	4.0
MSN 88-37-45□	88	370	450	4.7
MSN 88-43-23□	88	430	230	3.2
MSN 88-43-28□	88	430	280	3.7
MSN 88-43-35□	88	430	350	4.4
MSN 88-43-45□	88	430	450	5.5

Product no.	H	W	D	Weight (kg)
MSN 99-16-16□	99	160	160	1.3
MSN 99-16-23□	99	160	230	1.7
MSN 99-16-28□	99	160	280	2.0
MSN 99-21-16□	99	210	160	1.6
MSN 99-21-23□	99	210	230	2.0
MSN 99-21-28□	99	210	280	2.3
MSN 99-21-35□	99	210	350	2.8
MSN 99-26-23□	99	260	230	2.3
MSN 99-26-28□	99	260	280	2.7
MSN 99-26-35□	99	260	350	3.2
MSN 99-32-23□	99	320	230	2.6
MSN 99-32-28□	99	320	280	3.1
MSN 99-32-35□	99	320	350	3.7
MSN 99-32-45□	99	320	450	4.5
MSN 99-37-23□	99	370	230	2.9
MSN 99-37-28□	99	370	280	3.4
MSN 99-37-35□	99	370	350	4.1
MSN 99-37-45□	99	370	450	4.8
MSN 99-43-23□	99	430	230	3.3
MSN 99-43-28□	99	430	280	3.8
MSN 99-43-35□	99	430	350	4.5
MSN 99-43-45□	99	430	450	5.6
MSN133-16-16□	133	160	160	1.5
MSN133-16-23□	133	160	230	1.9
MSN133-16-28□	133	160	280	2.2
MSN133-21-16□	133	210	160	1.8
MSN133-21-23□	133	210	230	2.3
MSN133-21-28□	133	210	280	2.6
MSN133-21-35□	133	210	350	3.1
MSN133-26-23□	133	260	230	2.6
MSN133-26-28□	133	260	280	3.0
MSN133-26-35□	133	260	350	3.5
MSN133-32-23□	133	320	230	2.9
MSN133-32-28□	133	320	280	3.4
MSN133-32-35□	133	320	350	4.0
MSN133-32-45□	133	320	450	4.9
MSN133-37-23□	133	370	230	3.3
MSN133-37-28□	133	370	280	3.8
MSN133-37-35□	133	370	350	4.4
MSN133-37-45□	133	370	450	5.2
MSN133-43-23□	133	430	230	3.7
MSN133-43-28□	133	430	280	4.2
MSN133-43-35□	133	430	350	4.9
MSN133-43-45□	133	430	450	6.0

Product no. / Dimensions

Product no.	H	W	D	Weight (kg)
MSN149-16-16□	149	160	160	1.6
MSN149-16-23□	149	160	230	2.0
MSN149-16-28□	149	160	280	2.4
MSN149-21-16□	149	210	160	1.8
MSN149-21-23□	149	210	230	2.4
MSN149-21-28□	149	210	280	2.7
MSN149-21-35□	149	210	350	3.2
MSN149-26-23□	149	260	230	2.7
MSN149-26-28□	149	260	280	3.1
MSN149-26-35□	149	260	350	3.6
MSN149-32-23□	149	320	230	3.1
MSN149-32-28□	149	320	280	3.5
MSN149-32-35□	149	320	350	4.2
MSN149-32-45□	149	320	450	5.1
MSN149-37-23□	149	370	230	3.4
MSN149-37-28□	149	370	280	3.9
MSN149-37-35□	149	370	350	4.6
MSN149-37-45□	149	370	450	5.4
MSN149-43-23□	149	430	230	3.8
MSN149-43-28□	149	430	280	4.4
MSN149-43-35□	149	430	350	5.1
MSN149-43-45□	149	430	450	6.3
MSN177-16-16□	177	160	160	1.9
MSN177-16-23□	177	160	230	2.4
MSN177-16-28□	177	160	280	2.8
MSN177-21-16□	177	210	160	2.2
MSN177-21-23□	177	210	230	2.8
MSN177-21-28□	177	210	280	3.2
MSN177-21-35□	177	210	350	3.8
MSN177-26-23□	177	260	230	3.2
MSN177-26-28□	177	260	280	3.6
MSN177-26-35□	177	260	350	4.2
MSN177-32-23□	177	320	230	3.5
MSN177-32-28□	177	320	280	4.0
MSN177-32-35□	177	320	350	4.8
MSN177-32-45□	177	320	450	5.8
MSN177-37-23□	177	370	230	3.9
MSN177-37-28□	177	370	280	4.4
MSN177-37-35□	177	370	350	5.2
MSN177-37-45□	177	370	450	6.1
MSN177-43-23□	177	430	230	4.3
MSN177-43-28□	177	430	280	4.9
MSN177-43-35□	177	430	350	5.7
MSN177-43-45□	177	430	450	7.0

Product no.	H	W	D	Weight (kg)
MSN199-16-16□	199	160	160	2.0
MSN199-16-23□	199	160	230	2.6
MSN199-16-28□	199	160	280	2.9
MSN199-21-16□	199	210	160	2.3
MSN199-21-23□	199	210	230	2.9
MSN199-21-28□	199	210	280	3.3
MSN199-21-35□	199	210	350	3.9
MSN199-26-23□	199	260	230	3.3
MSN199-26-28□	199	260	280	3.7
MSN199-26-35□	199	260	350	4.4
MSN199-32-23□	199	320	230	3.7
MSN199-32-28□	199	320	280	4.2
MSN199-32-35□	199	320	350	4.9
MSN199-32-45□	199	320	450	5.9
MSN199-37-23□	199	370	230	4.0
MSN199-37-28□	199	370	280	4.6
MSN199-37-35□	199	370	350	5.4
MSN199-37-45□	199	370	450	6.3
MSN199-43-23□	199	430	230	4.5
MSN199-43-28□	199	430	280	5.1
MSN199-43-35□	199	430	350	5.9
MSN199-43-45□	199	430	450	7.2
MSN222-16-16□	222	160	160	2.2
MSN222-16-23□	222	160	230	2.7
MSN222-16-28□	222	160	280	3.0
MSN222-21-16□	222	210	160	2.5
MSN222-21-23□	222	210	230	3.0
MSN222-21-28□	222	210	280	3.4
MSN222-21-35□	222	210	350	4.1
MSN222-26-23□	222	260	230	3.4
MSN222-26-28□	222	260	280	3.8
MSN222-26-35□	222	260	350	4.5
MSN222-32-23□	222	320	230	3.8
MSN222-32-28□	222	320	280	4.3
MSN222-32-35□	222	320	350	5.1
MSN222-32-45□	222	320	450	6.2
MSN222-37-23□	222	370	230	4.2
MSN222-37-28□	222	370	280	4.8
MSN222-37-35□	222	370	350	5.6
MSN222-37-45□	222	370	450	6.6
MSN222-43-23□	222	430	230	4.7
MSN222-43-28□	222	430	280	5.2
MSN222-43-35□	222	430	350	6.1
MSN222-43-45□	222	430	450	7.5

MSY SERIES DESKTOP ENCLOSURE with CARRYING HANDLE

- Available in 3 different colors and 160 different sizes.
- Maximum load support of 20kg.

Assembly drawings

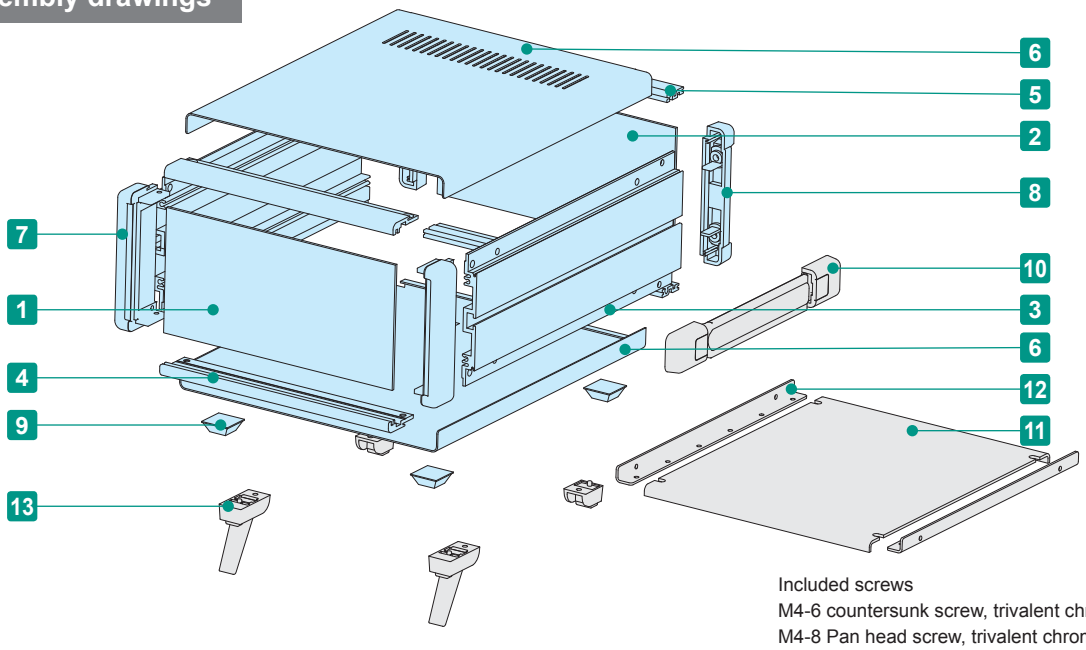

Included screws
M4-6 countersunk screw, trivalent chromate x 4 pcs
M4-8 Pan head screw, trivalent chromate x 8 pcs
M4-10 Binding head screw, black trivalent chromate x 4 pcs

Components

No.	Part name	Pcs	Material	Color / Finish
1	Front panel	1	Aluminium A1050P t=2.0	Silver • Black / Hairline brushed & Anodized
2	Rear panel	1	Aluminium A1050P t=2.0	Silver • Black / Anodized
3	Side frame	2	Extruded aluminium A6063S-T5	Gray • Black / Painted
4	Front frame	2	Extruded aluminium A6063S-T5	Gray • Black / Painted
5	Rear frame	2	Extruded aluminium A6063S-T5	Silver / Anodized
6	Top • Bottom cover	1 each	Steel SPCC t=1.0	Light gray • Black / Painted
7	Corner block	2	Diecast aluminium ADC12	Gray • Black / Painted
8	Rear feet	2	ABS UL94V-0	Gray • Black
9	Rubber feet	4	Polyurethane	Black
10	Carrying handle	1	PP + Elastomer	Gray • Black

- Note: Front / rear panels are covered with a protective film on one side. Remove before assembly.

Accessories (Optional parts)

11 Mounting plate MSC series
See page MSC • MSCL-1

12 L-bracket MSCL series
See page MSC • MSCL-1

13 Tilt leg TL series
See page TL • CBF-1

Cable hook CBF series
See page TL • CBF-1

MSY dimensions

■ Drawings below are reference examples only.
DXF/DWG/PDF drawings available on our website.

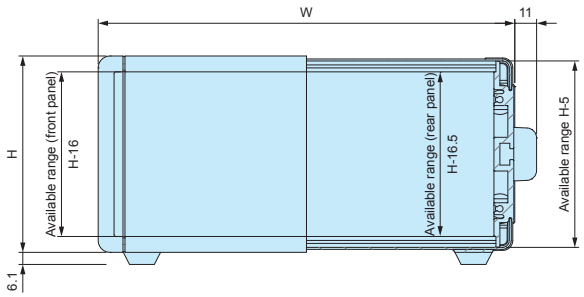

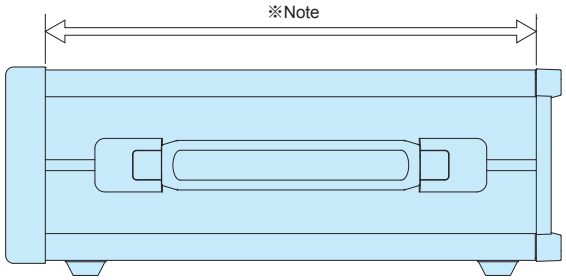

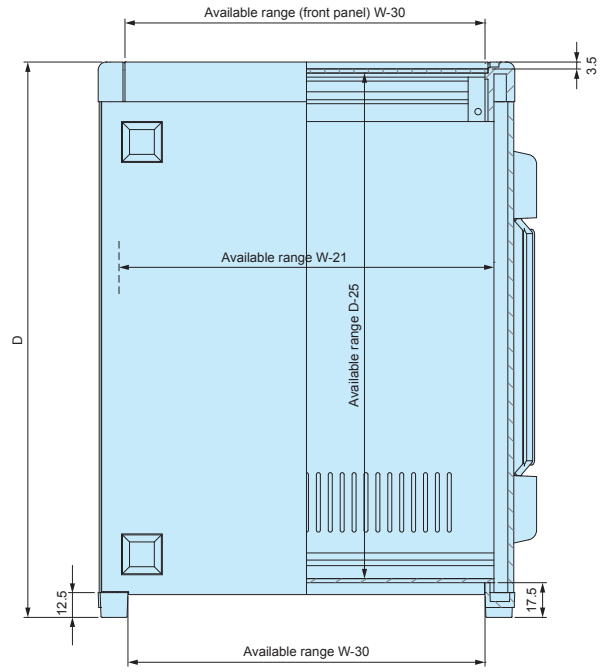

※ Note
Carrying handle location can be freely affixed within denoted range.

■ Top • Bottom cover of sizes 160×230, 160×280 do not have ventilation holes.

Color Type

■ Please suffix color code at the end of the product number.

G		B		BS	
Panel	Silver	Panel	Black	Panel	Silver
Top • Bottom cover	Light gray	Top • Bottom cover	Black	Top • Bottom cover	Black
Side frame	Gray	Side frame	Black	Side frame	Black

Product no. / Dimensions

Product no.	H	W	D	Weight (kg)
MSY 66-16-23□	66	160	230	1.4
MSY 66-16-28□	66	160	280	1.6
MSY 66-21-23□	66	210	230	1.6
MSY 66-21-28□	66	210	280	1.9
MSY 66-21-35□	66	210	350	2.3
MSY 66-26-23□	66	260	230	1.9
MSY 66-26-28□	66	260	280	2.2
MSY 66-26-35□	66	260	350	2.7
MSY 66-32-23□	66	320	230	2.2
MSY 66-32-28□	66	320	280	2.6
MSY 66-32-35□	66	320	350	3.1
MSY 66-32-45□	66	320	450	3.9
MSY 66-37-23□	66	370	230	2.5
MSY 66-37-28□	66	370	280	2.9
MSY 66-37-35□	66	370	350	3.5
MSY 66-37-45□	66	370	450	4.2
MSY 66-43-23□	66	430	230	2.8
MSY 66-43-28□	66	430	280	3.3
MSY 66-43-35□	66	430	350	3.9
MSY 66-43-45□	66	430	450	4.9
MSY 88-16-23□	88	160	230	1.5
MSY 88-16-28□	88	160	280	1.8
MSY 88-21-23□	88	210	230	1.8
MSY 88-21-28□	88	210	280	2.1
MSY 88-21-35□	88	210	350	2.5
MSY 88-26-23□	88	260	230	2.1
MSY 88-26-28□	88	260	280	2.4
MSY 88-26-35□	88	260	350	2.9
MSY 88-32-23□	88	320	230	2.4
MSY 88-32-28□	88	320	280	2.8
MSY 88-32-35□	88	320	350	3.4
MSY 88-32-45□	88	320	450	4.2
MSY 88-37-23□	88	370	230	2.7
MSY 88-37-28□	88	370	280	3.1
MSY 88-37-35□	88	370	350	3.7
MSY 88-37-45□	88	370	450	4.5
MSY 88-43-23□	88	430	230	3.0
MSY 88-43-28□	88	430	280	3.5
MSY 88-43-35□	88	430	350	4.2
MSY 88-43-45□	88	430	450	5.2

Product no.	H	W	D	Weight (kg)
MSY 99-16-23□	99	160	230	1.6
MSY 99-16-28□	99	160	280	1.8
MSY 99-21-23□	99	210	230	1.8
MSY 99-21-28□	99	210	280	2.1
MSY 99-21-35□	99	210	350	2.6
MSY 99-26-23□	99	260	230	2.2
MSY 99-26-28□	99	260	280	2.5
MSY 99-26-35□	99	260	350	3.0
MSY 99-32-23□	99	320	230	2.5
MSY 99-32-28□	99	320	280	2.9
MSY 99-32-35□	99	320	350	3.5
MSY 99-32-45□	99	320	450	4.3
MSY 99-37-23□	99	370	230	2.7
MSY 99-37-28□	99	370	280	3.2
MSY 99-37-35□	99	370	350	3.8
MSY 99-37-45□	99	370	450	4.6
MSY 99-43-23□	99	430	230	3.1
MSY 99-43-28□	99	430	280	3.6
MSY 99-43-35□	99	430	350	4.3
MSY 99-43-45□	99	430	450	5.3
MSY133-16-23□	133	160	230	1.8
MSY133-16-28□	133	160	280	2.1
MSY133-21-23□	133	210	230	2.1
MSY133-21-28□	133	210	280	2.4
MSY133-21-35□	133	210	350	2.9
MSY133-26-23□	133	260	230	2.4
MSY133-26-28□	133	260	280	2.8
MSY133-26-35□	133	260	350	3.3
MSY133-32-23□	133	320	230	2.7
MSY133-32-28□	133	320	280	3.2
MSY133-32-35□	133	320	350	3.8
MSY133-32-45□	133	320	450	4.6
MSY133-37-23□	133	370	230	3.0
MSY133-37-28□	133	370	280	3.5
MSY133-37-35□	133	370	350	4.2
MSY133-37-45□	133	370	450	5.0
MSY133-43-23□	133	430	230	3.4
MSY133-43-28□	133	430	280	3.9
MSY133-43-35□	133	430	350	4.7
MSY133-43-45□	133	430	450	5.8

Product no. / Dimensions

Product no.	H	W	D	Weight (kg)
MSY149-16-23□	149	160	230	1.9
MSY149-16-28□	149	160	280	2.2
MSY149-21-23□	149	210	230	2.2
MSY149-21-28□	149	210	280	2.5
MSY149-21-35□	149	210	350	3.0
MSY149-26-23□	149	260	230	2.5
MSY149-26-28□	149	260	280	2.9
MSY149-26-35□	149	260	350	3.4
MSY149-32-23□	149	320	230	2.9
MSY149-32-28□	149	320	280	3.3
MSY149-32-35□	149	320	350	4.0
MSY149-32-45□	149	320	450	4.9
MSY149-37-23□	149	370	230	3.2
MSY149-37-28□	149	370	280	3.7
MSY149-37-35□	149	370	350	4.3
MSY149-37-45□	149	370	450	5.2
MSY149-43-23□	149	430	230	3.6
MSY149-43-28□	149	430	280	4.1
MSY149-43-35□	149	430	350	4.8
MSY149-43-45□	149	430	450	6.0
MSY177-16-23□	177	160	230	2.3
MSY177-16-28□	177	160	280	2.6
MSY177-21-23□	177	210	230	2.6
MSY177-21-28□	177	210	280	3.0
MSY177-21-35□	177	210	350	3.6
MSY177-26-23□	177	260	230	3.0
MSY177-26-28□	177	260	280	3.4
MSY177-26-35□	177	260	350	4.0
MSY177-32-23□	177	320	230	3.3
MSY177-32-28□	177	320	280	3.8
MSY177-32-35□	177	320	350	4.6
MSY177-32-45□	177	320	450	5.6
MSY177-37-23□	177	370	230	3.6
MSY177-37-28□	177	370	280	4.2
MSY177-37-35□	177	370	350	5.0
MSY177-37-45□	177	370	450	5.9
MSY177-43-23□	177	430	230	4.0
MSY177-43-28□	177	430	280	4.6
MSY177-43-35□	177	430	350	5.5
MSY177-43-45□	177	430	450	6.7

Product no.	H	W	D	Weight (kg)
MSY199-16-23□	199	160	230	2.4
MSY199-16-28□	199	160	280	2.8
MSY199-21-23□	199	210	230	2.7
MSY199-21-28□	199	210	280	3.1
MSY199-21-35□	199	210	350	3.7
MSY199-26-23□	199	260	230	3.1
MSY199-26-28□	199	260	280	3.5
MSY199-26-35□	199	260	350	4.2
MSY199-32-23□	199	320	230	3.5
MSY199-32-28□	199	320	280	4.0
MSY199-32-35□	199	320	350	4.7
MSY199-32-45□	199	320	450	5.7
MSY199-37-23□	199	370	230	3.8
MSY199-37-28□	199	370	280	4.4
MSY199-37-35□	199	370	350	5.1
MSY199-37-45□	199	370	450	6.1
MSY199-43-23□	199	430	230	4.2
MSY199-43-28□	199	430	280	4.8
MSY199-43-35□	199	430	350	5.6
MSY199-43-45□	199	430	450	6.9
MSY222-16-23□	222	160	230	2.5
MSY222-16-28□	222	160	280	2.9
MSY222-21-23□	222	210	230	2.9
MSY222-21-28□	222	210	280	3.3
MSY222-21-35□	222	210	350	3.9
MSY222-26-23□	222	260	230	3.3
MSY222-26-28□	222	260	280	3.7
MSY222-26-35□	222	260	350	4.4
MSY222-32-23□	222	320	230	3.6
MSY222-32-28□	222	320	280	4.1
MSY222-32-35□	222	320	350	4.9
MSY222-32-45□	222	320	450	6.0
MSY222-37-23□	222	370	230	4.0
MSY222-37-28□	222	370	280	4.5
MSY222-37-35□	222	370	350	5.3
MSY222-37-45□	222	370	450	6.4
MSY222-43-23□	222	430	230	4.4
MSY222-43-28□	222	430	280	5.0
MSY222-43-35□	222	430	350	5.9
MSY222-43-45□	222	430	450	7.2

MSR SERIES RACK MOUNT ENCLOSURE

MSR dimensions

- 16 different sizes available.
- Screws are hidden out of view for a sophisticated and elegant look.
- Easy to punch or mill holes on both front and rear panels.

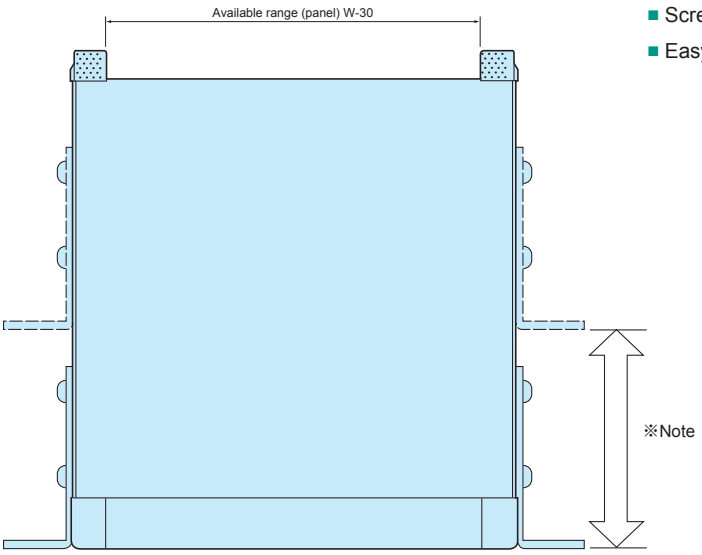

- Drawings below are reference examples only.
  DXF/DWG/PDF drawings available on our website.

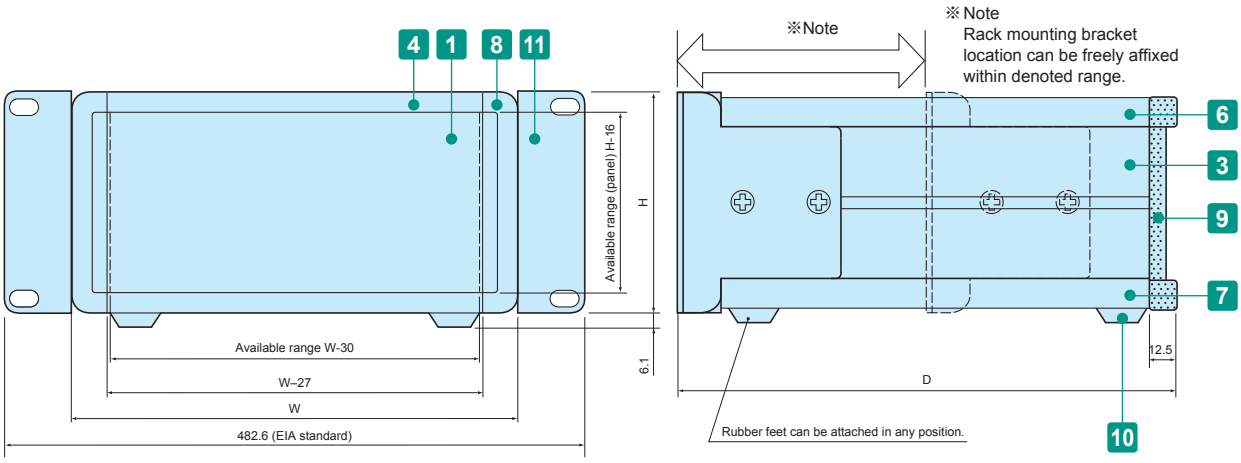

Components

■ Refer to page 250 for more information on rack mounting bracket.

No.	Part name	Pcs	Material	Color / Finish
1	Front panel	1	Aluminium A1050P t=2.0	Silver • Black / Hairline brushed & Anodized
–	Rear panel	1	Aluminium A1050P t=2.0	Silver • Black / Anodized
3	Side frame	2	Extruded aluminium A6063S-T5	Gray • Black / Painted
4	Front frame	2	Extruded aluminium A6063S-T5	Gray • Black / Painted
–	Rear frame	2	Extruded aluminium A6063S-T5	Silver / Anodized
6	Top cover	1	Steel SPCC t=1.0	Light gray • Black / Painted
7	Bottom cover	1	Steel SPCC t=1.0	Light gray • Black / Painted
8	Corner block	2	Diecast aluminium ADC12	Gray • Black / Painted
9	Rear feet	2	ABS UL94V-0	Gray • Black
10	Rubber feet	4	Polyurethane	Black
11	Rack mounting bracket	2	Extruded aluminium A6063S-T5	Gray • Black painted

■ Note: Front / rear panels are covered with a protective film on one side. Remove before assembly.

Included screws and nuts
M4-6 countersunk • Trivalent chromate x 4 pcs
M4-8 Pan head • Trivalent chromate x 8 pcs
M4-10 Binding head • Black trivalent chromate x 4 pcs
M5-10 Flat head • Black trivalent chromate x 4 pcs
M5 Nut (Product no. MZ-5) x 4 pcs

Accessories (Optional parts)

Mounting plate MSC series
See page MSC • MSCL-1

L-bracket MSCL series
See page MSC • MSCL-1

Aluminium handle OH series
See page OH • KH-1

Cable hook CBF series
See page TL • CBF-1

Color Type

■ Please suffix color code at the end of the product number.

● G		● B		◓ BS	
Panel	Silver	Panel	Black	Panel	Silver
Top • Bottom cover	Light gray	Top • Bottom cover	Black	Top • Bottom cover	Black
Side frame	Gray	Side frame	Black	Side frame	Black

Product no. / Dimensions

Product no.	H	W	D	Weight (kg)
MSR 88-43-23□	88	430	230	3.1
MSR 88-43-28□	88	430	280	3.5
MSR 88-43-35□	88	430	350	4.2
MSR 88-43-45□	88	430	450	5.1
MSR133-43-23□	132.5	430	230	3.6
MSR133-43-28□	132.5	430	280	4.1
MSR133-43-35□	132.5	430	350	4.8
MSR133-43-45□	132.5	430	450	5.8
MSR177-43-23□	177	430	230	4.3
MSR177-43-28□	177	430	280	4.9
MSR177-43-35□	177	430	350	5.7
MSR177-43-45□	177	430	450	6.9
MSR222-43-23□	221.5	430	230	4.7
MSR222-43-28□	221.5	430	280	5.3
MSR222-43-35□	221.5	430	350	6.2
MSR222-43-45□	221.5	430	450	7.5

MO SERIES ALUMINIUM SYSTEM CASE

- Available in 3 different colors and 176 different sizes.
- Lightweight aluminium system case.
- Suitable for use as measuring instruments, testing equipment, power supply controller, etc.

Assembly drawings

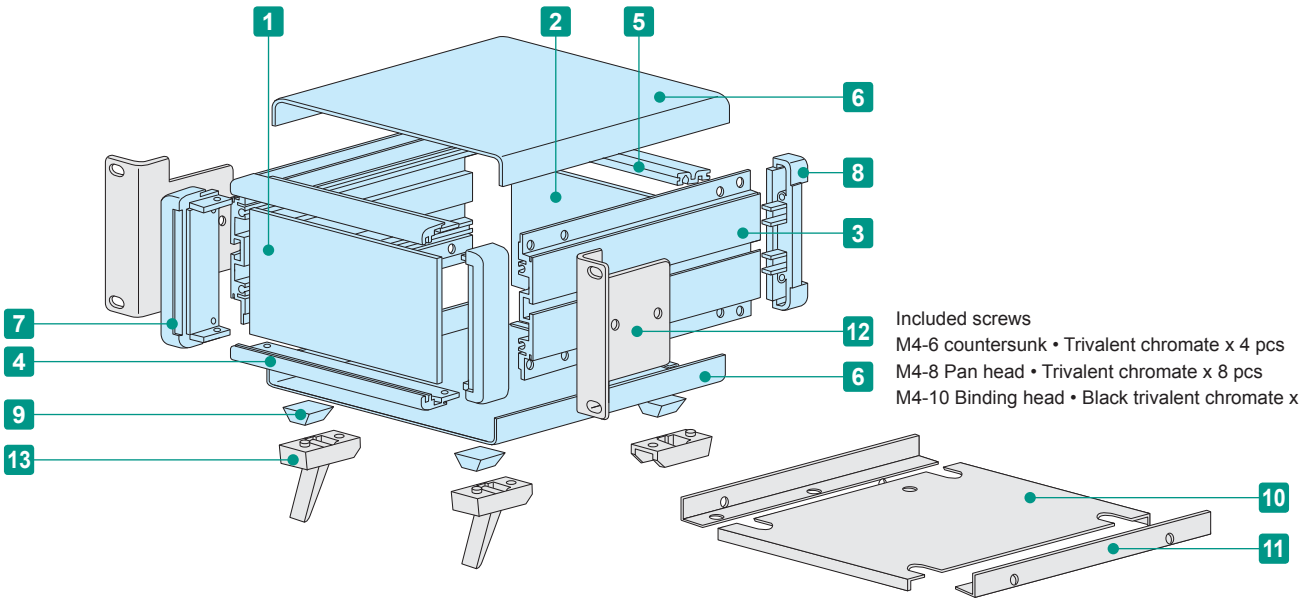

Included screws
M4-6 countersunk • Trivalent chromate x 4 pcs
M4-8 Pan head • Trivalent chromate x 8 pcs
M4-10 Binding head • Black trivalent chromate x 4 pcs

Components

No.	Part name	Pcs	Material	Color / Finish
1	Front panel	1	Aluminium A1050P t=2.0	Silver • Black / Hairline brushed & Anodized
2	Rear panel	1	Aluminium A1050P t=2.0	Silver • Black / Anodized
3	Side frame	2	Extruded aluminium A6063S-T5	Gray • Black / Painted
4	Front frame	2	Extruded aluminium A6063S-T5	Gray • Black / Painted
5	Rear frame	2	Extruded aluminium A6063S-T5	Silver / Anodized
6	Top • bottom cover	1 each	Aluminium A1100P t=1.0	Light gray • Black / Painted
7	Corner block	2	Diecast aluminium ADC12	Gray • Black / Painted
8	Rear feet	2	ABS UL94V-0	Gray • Black
9	Rubber feet	4	Polyurethane	Black

- Note: Front / rear panels and top / bottom covers are covered with a protective film on one side. Remove before assembly.

Accessories (Optional parts)

10 Mounting plate MSC series
See page MSC • MSCL-1

11 L-bracket MSCL series
See page MSC • MSCL-1

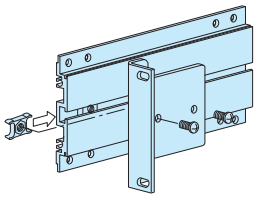

12 Rack mounting MSM series
See MSM • MZ-1

13 Tilt let TL series
See page TL • CBF-1

Cable hook CBF series
See page TL • CBF-1

MO dimensions

■ Drawings below are reference examples only.
DXF/DWG/PDF drawings available on our website.

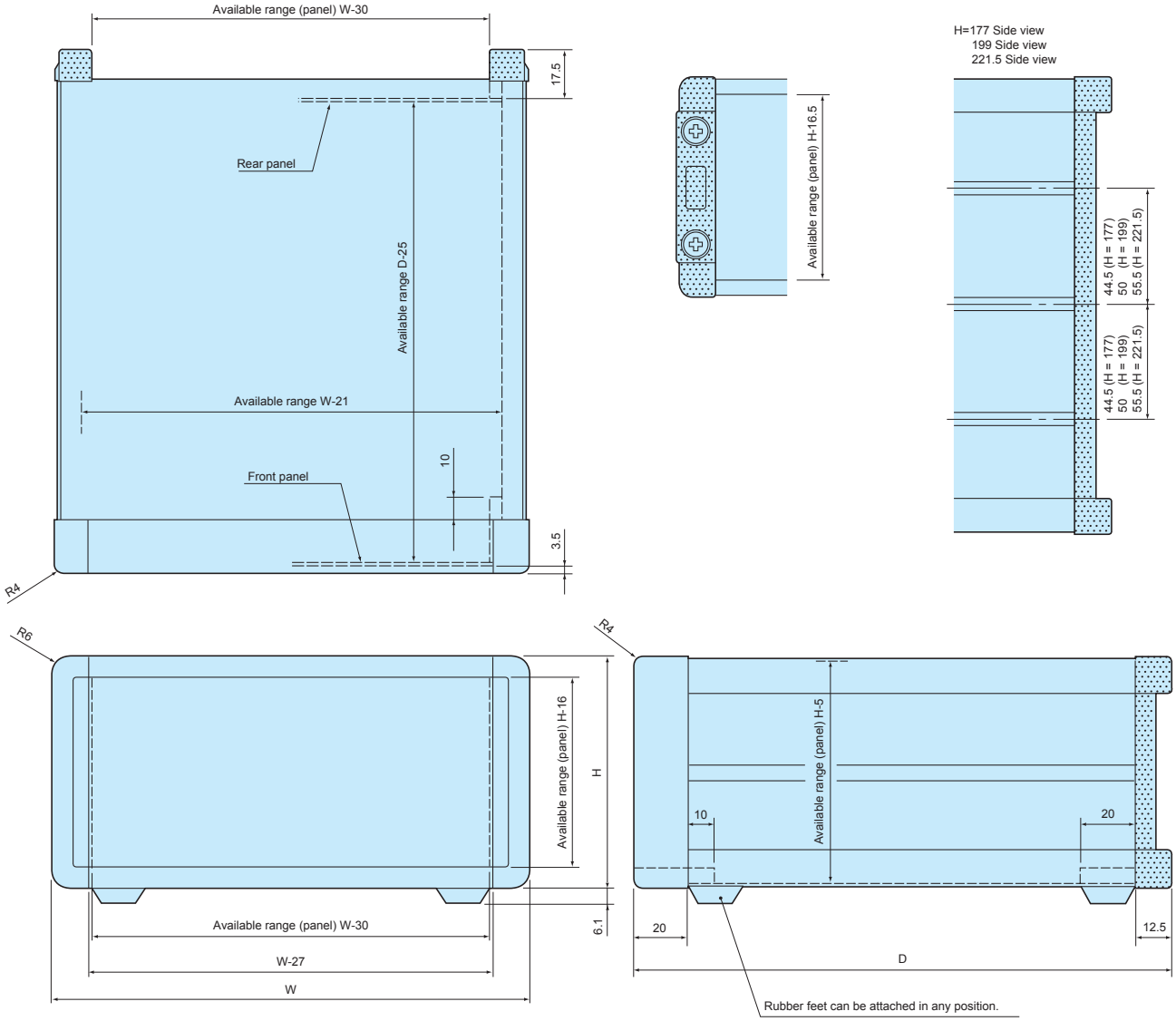

Color Type

■ Please suffix color code at the end of the product number.

G

Panel	Silver
Top • Bottom cover	Light Gray
Side frame	Gray

B

Panel	Black
Top • Bottom cover	Black
Side frame	Black

BS

Panel	Silver
Top • Bottom cover	Black
Side frame	Black

Product no. / Dimensions

Product no.	H	W	D	Weight (kg)
MO 66-16-16□	66	160	160	0.8
MO 66-16-23□	66	160	230	1.0
MO 66-16-28□	66	160	280	1.1
MO 66-21-16□	66	210	160	0.9
MO 66-21-23□	66	210	230	1.1
MO 66-21-28□	66	210	280	1.3
MO 66-21-35□	66	210	350	1.5
MO 66-26-23□	66	260	230	1.3
MO 66-26-28□	66	260	280	1.5
MO 66-26-35□	66	260	350	1.7
MO 66-32-23□	66	320	230	1.5
MO 66-32-28□	66	320	280	1.7
MO 66-32-35□	66	320	350	2.0
MO 66-32-45□	66	320	450	2.4
MO 66-37-23□	66	370	230	1.6
MO 66-37-28□	66	370	280	1.9
MO 66-37-35□	66	370	350	2.2
MO 66-37-45□	66	370	450	2.6
MO 66-43-23□	66	430	230	1.8
MO 66-43-28□	66	430	280	2.1
MO 66-43-35□	66	430	350	2.4
MO 66-43-45□	66	430	450	2.9
MO 88-16-16□	88	160	160	0.9
MO 88-16-23□	88	160	230	1.1
MO 88-16-28□	88	160	280	1.3
MO 88-21-16□	88	210	160	1.0
MO 88-21-23□	88	210	230	1.3
MO 88-21-28□	88	210	280	1.5
MO 88-21-35□	88	210	350	1.7
MO 88-26-23□	88	260	230	1.5
MO 88-26-28□	88	260	280	1.7
MO 88-26-35□	88	260	350	2.0
MO 88-32-23□	88	320	230	1.7
MO 88-32-28□	88	320	280	1.9
MO 88-32-35□	88	320	350	2.2
MO 88-32-45□	88	320	450	2.7
MO 88-37-23□	88	370	230	1.8
MO 88-37-28□	88	370	280	2.1
MO 88-37-35□	88	370	350	2.4
MO 88-37-45□	88	370	450	2.9
MO 88-43-23□	88	430	230	2.1
MO 88-43-28□	88	430	280	2.3
MO 88-43-35□	88	430	350	2.7
MO 88-43-45□	88	430	450	3.2

Product no.	H	W	D	Weight (kg)
MO 99-16-16□	99	160	160	0.9
MO 99-16-23□	99	160	230	1.2
MO 99-16-28□	99	160	280	1.3
MO 99-21-16□	99	210	160	1.1
MO 99-21-23□	99	210	230	1.3
MO 99-21-28□	99	210	280	1.5
MO 99-21-35□	99	210	350	1.8
MO 99-26-23□	99	260	230	1.6
MO 99-26-28□	99	260	280	1.7
MO 99-26-35□	99	260	350	2.0
MO 99-32-23□	99	320	230	1.7
MO 99-32-28□	99	320	280	2.0
MO 99-32-35□	99	320	350	2.3
MO 99-32-45□	99	320	450	2.8
MO 99-37-23□	99	370	230	1.9
MO 99-37-28□	99	370	280	2.2
MO 99-37-35□	99	370	350	2.5
MO 99-37-45□	99	370	450	3.0
MO 99-43-23□	99	430	230	2.1
MO 99-43-28□	99	430	280	2.4
MO 99-43-35□	99	430	350	2.8
MO 99-43-45□	99	430	450	3.4
MO133-16-16□	132.5	160	160	1.1
MO133-16-23□	132.5	160	230	1.4
MO133-16-28□	132.5	160	280	1.6
MO133-21-16□	132.5	210	160	1.3
MO133-21-23□	132.5	210	230	1.6
MO133-21-28□	132.5	210	280	1.8
MO133-21-35□	132.5	210	350	2.1
MO133-26-23□	132.5	260	230	1.8
MO133-26-28□	132.5	260	280	2.0
MO133-26-35□	132.5	260	350	2.4
MO133-32-23□	132.5	320	230	2.0
MO133-32-28□	132.5	320	280	2.3
MO133-32-35□	132.5	320	350	2.7
MO133-32-45□	132.5	320	450	3.2
MO133-37-23□	132.5	370	230	2.2
MO133-37-28□	132.5	370	280	2.5
MO133-37-35□	132.5	370	350	2.9
MO133-37-45□	132.5	370	450	3.4
MO133-43-23□	132.5	430	230	2.5
MO133-43-28□	132.5	430	280	2.8
MO133-43-35□	132.5	430	350	3.2
MO133-43-45□	132.5	430	450	3.8

Product no. / Dimensions

Product no.	H	W	D	Weight (kg)
MO149-16-16□	149	160	160	1.2
MO149-16-23□	149	160	230	1.5
MO149-16-28□	149	160	280	1.7
MO149-21-16□	149	210	160	1.4
MO149-21-23□	149	210	230	1.7
MO149-21-28□	149	210	280	1.9
MO149-21-35□	149	210	350	2.2
MO149-26-23□	149	260	230	1.9
MO149-26-28□	149	260	280	2.2
MO149-26-35□	149	260	350	2.5
MO149-32-23□	149	320	230	2.1
MO149-32-28□	149	320	280	2.4
MO149-32-35□	149	320	350	2.8
MO149-32-45□	149	320	450	3.4
MO149-37-23□	149	370	230	2.4
MO149-37-28□	149	370	280	2.6
MO149-37-35□	149	370	350	3.0
MO149-37-45□	149	370	450	3.6
MO149-43-23□	149	430	230	2.6
MO149-43-28□	149	430	280	2.9
MO149-43-35□	149	430	350	3.3
MO149-43-45□	149	430	450	4.0
MO177-16-16□	177	160	160	1.5
MO177-16-23□	177	160	230	1.9
MO177-16-28□	177	160	280	2.1
MO177-21-16□	177	210	160	1.7
MO177-21-23□	177	210	230	2.1
MO177-21-28□	177	210	280	2.4
MO177-21-35□	177	210	350	2.8
MO177-26-23□	177	260	230	2.3
MO177-26-28□	177	260	280	2.6
MO177-26-35□	177	260	350	3.1
MO177-32-23□	177	320	230	2.6
MO177-32-28□	177	320	280	2.9
MO177-32-35□	177	320	350	3.4
MO177-32-45□	177	320	450	4.1
MO177-37-23□	177	370	230	2.8
MO177-37-28□	177	370	280	3.2
MO177-37-35□	177	370	350	3.7
MO177-37-45□	177	370	450	4.3
MO177-43-23□	177	430	230	3.1
MO177-43-28□	177	430	280	3.5
MO177-43-35□	177	430	350	4.0
MO177-43-45□	177	430	450	4.8

Product no.	H	W	D	Weight (kg)
MO199-16-16□	199	160	160	1.6
MO199-16-23□	199	160	230	2.0
MO199-16-28□	199	160	280	2.3
MO199-21-16□	199	210	160	1.8
MO199-21-23□	199	210	230	2.2
MO199-21-28□	199	210	280	2.5
MO199-21-35□	199	210	350	2.9
MO199-26-23□	199	260	230	2.5
MO199-26-28□	199	260	280	2.8
MO199-26-35□	199	260	350	3.2
MO199-32-23□	199	320	230	2.7
MO199-32-28□	199	320	280	3.1
MO199-32-35□	199	320	350	3.6
MO199-32-45□	199	320	450	4.2
MO199-37-23□	199	370	230	3.0
MO199-37-28□	199	370	280	3.3
MO199-37-35□	199	370	350	3.8
MO199-37-45□	199	370	450	4.5
MO199-43-23□	199	430	230	3.3
MO199-43-28□	199	430	280	3.6
MO199-43-35□	199	430	350	4.2
MO199-43-45□	199	430	450	4.9
MO222-16-16□	221.5	160	160	1.7
MO222-16-23□	221.5	160	230	2.1
MO222-16-28□	221.5	160	280	2.4
MO222-21-16□	221.5	210	160	1.9
MO222-21-23□	221.5	210	230	2.4
MO222-21-28□	221.5	210	280	2.6
MO222-21-35□	221.5	210	350	3.1
MO222-26-23□	221.5	260	230	2.6
MO222-26-28□	221.5	260	280	2.9
MO222-26-35□	221.5	260	350	3.4
MO222-32-23□	221.5	320	230	2.9
MO222-32-28□	221.5	320	280	3.2
MO222-32-35□	221.5	320	350	3.8
MO222-32-45□	221.5	320	450	4.5
MO222-37-23□	221.5	370	230	3.2
MO222-37-28□	221.5	370	280	3.5
MO222-37-35□	221.5	370	350	4.1
MO222-37-45□	221.5	370	450	4.8
MO222-43-23□	221.5	430	230	3.5
MO222-43-28□	221.5	430	280	3.8
MO222-43-35□	221.5	430	350	4.4
MO222-43-45□	221.5	430	450	5.3

MON SERIES SYSTEM CASE with STAND HANDLE

- Available in 3 different colors and 176 different sizes.
- Stand handle can be shifted and locked at 30° intervals. Maximum load support of 25kg.
- Lightweight system case with stand handle. Suitable for use as measuring instruments, etc.

Assembly drawings

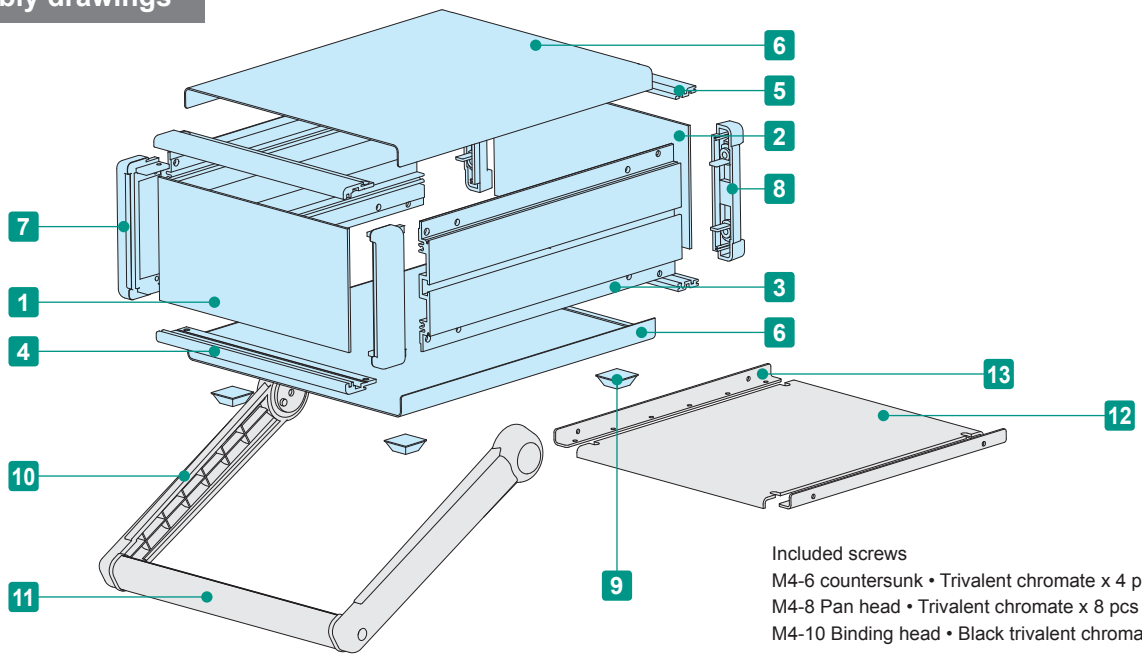

Included screws
M4-6 countersunk • Trivalent chromate x 4 pcs
M4-8 Pan head • Trivalent chromate x 8 pcs
M4-10 Binding head • Black trivalent chromate x 4 pcs

Components

No.	Part name		Pcs	Material	Color / Finish
1	Front panel		1	Aluminium A1050P t=2.0	Silver • Black / Hairline brushed & Anodized
2	Rear panel		1	Aluminium A1050P t=2.0	Silver • Black / Anodized
3	Side frame		2	Extruded aluminium A6063S-T5	Gray • Black / Painted
4	Front frame		2	Extruded aluminium A6063S-T5	Gray • Black / Painted
5	Rear frame		2	Extruded aluminium A6063S-T5	Silver / Anodized
6	Top • Bottom cover		1 each	Aluminium A1100P t=1.0	Light gray • Black / Painted
7	Corner block		2	Diecast aluminium ADC12	Gray • Black / Painted
8	Rear feet		2	ABS UL94V-0	Gray • Black
9	Rubber feet		4	Polyurethane	Black
10	Stand handle	Bracket	2	ABS UL94HB	Light gray • Black
11		Grip	1	Extruded aluminium A6063S-T5	Silver • Black

- Note: Front / rear panels and top / bottom covers are covered with a protective film on one side. Remove before assembly.

Accessories (Optional parts)

12 Mounting plate MSC series
See page MSC • MSCL-1

13 L-bracket MSCL series
See page MSC • MSCL-1

Cable hook CBF series
See page TL • CBF-1

MON dimensions

■ Drawings below are reference examples only.
DXF/DWG/PDF drawings available on our website.

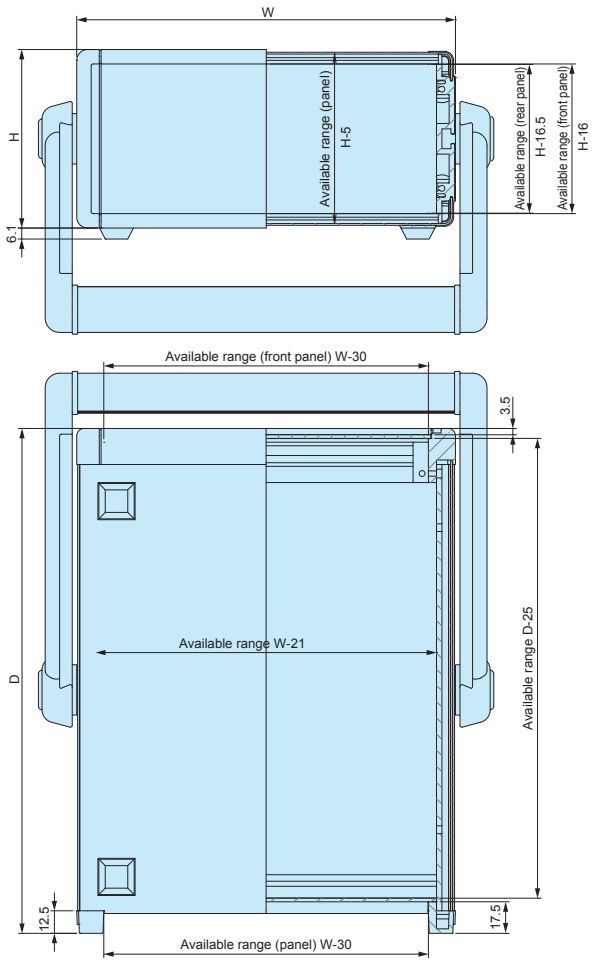

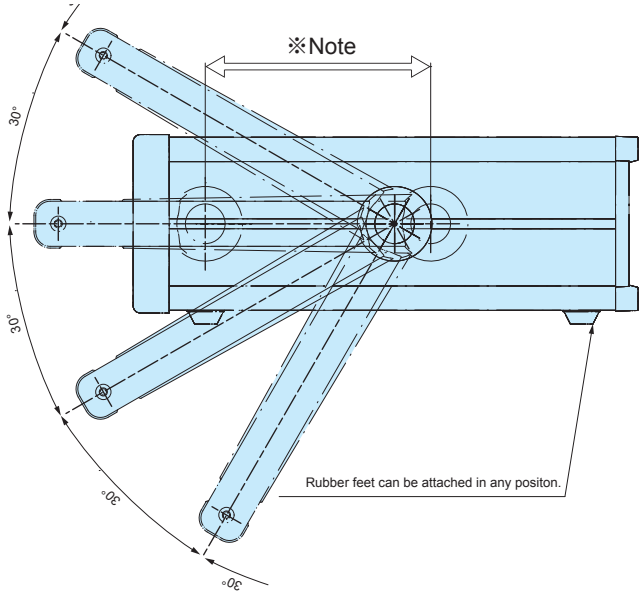

※Note
Stand handle location can be freely affixed within denoted range.

Color Type

■ Please suffix color code at the end of the product number.

G

Panel	Silver
Top • Bottom cover	Light Gray
Side frame	Gray

B

Panel	Black
Top • Bottom cover	Black
Side frame	Black

BS

Panel	Silver
Top • Bottom cover	Black
Side frame	Black

Product no. / Dimensions

Product no.	H	W	D	Weight (kg)
MON 66-16-16□	66	160	160	0.9
MON 66-16-23□	66	160	230	1.1
MON 66-16-28□	66	160	280	1.3
MON 66-21-16□	66	210	160	1.1
MON 66-21-23□	66	210	230	1.3
MON 66-21-28□	66	210	280	1.5
MON 66-21-35□	66	210	350	1.7
MON 66-26-23□	66	260	230	1.5
MON 66-26-28□	66	260	280	1.7
MON 66-26-35□	66	260	350	2.0
MON 66-32-23□	66	320	230	1.7
MON 66-32-28□	66	320	280	1.9
MON 66-32-35□	66	320	350	2.2
MON 66-32-45□	66	320	450	2.6
MON 66-37-23□	66	370	230	1.9
MON 66-37-28□	66	370	280	2.1
MON 66-37-35□	66	370	350	2.4
MON 66-37-45□	66	370	450	2.8
MON 66-43-23□	66	430	230	2.1
MON 66-43-28□	66	430	280	2.4
MON 66-43-35□	66	430	350	2.7
MON 66-43-45□	66	430	450	3.2
MON 88-16-16□	88	160	160	1.0
MON 88-16-23□	88	160	230	1.3
MON 88-16-28□	88	160	280	1.5
MON 88-21-16□	88	210	160	1.2
MON 88-21-23□	88	210	230	1.5
MON 88-21-28□	88	210	280	1.7
MON 88-21-35□	88	210	350	1.9
MON 88-26-23□	88	260	230	1.7
MON 88-26-28□	88	260	280	1.9
MON 88-26-35□	88	260	350	2.2
MON 88-32-23□	88	320	230	1.9
MON 88-32-28□	88	320	280	2.1
MON 88-32-35□	88	320	350	2.5
MON 88-32-45□	88	320	450	2.9
MON 88-37-23□	88	370	230	2.1
MON 88-37-28□	88	370	280	2.3
MON 88-37-35□	88	370	350	2.7
MON 88-37-45□	88	370	450	3.1
MON 88-43-23□	88	430	230	2.3
MON 88-43-28□	88	430	280	2.6
MON 88-43-35□	88	430	350	3.0
MON 88-43-45□	88	430	450	3.5

Product no.	H	W	D	Weight (kg)
MON 99-16-16□	99	160	160	1.1
MON 99-16-23□	99	160	230	1.3
MON 99-16-28□	99	160	280	1.5
MON 99-21-16□	99	210	160	1.3
MON 99-21-23□	99	210	230	1.5
MON 99-21-28□	99	210	280	1.7
MON 99-21-35□	99	210	350	2.0
MON 99-26-23□	99	260	230	1.7
MON 99-26-28□	99	260	280	2.0
MON 99-26-35□	99	260	350	2.3
MON 99-32-23□	99	320	230	2.0
MON 99-32-28□	99	320	280	2.2
MON 99-32-35□	99	320	350	2.6
MON 99-32-45□	99	320	450	3.0
MON 99-37-23□	99	370	230	2.1
MON 99-37-28□	99	370	280	2.4
MON 99-37-35□	99	370	350	2.8
MON 99-37-45□	99	370	450	3.2
MON 99-43-23□	99	430	230	2.4
MON 99-43-28□	99	430	280	2.7
MON 99-43-35□	99	430	350	3.1
MON 99-43-45□	99	430	450	3.7
MON133-16-16□	132.5	160	160	1.3
MON133-16-23□	132.5	160	230	1.6
MON133-16-28□	132.5	160	280	1.8
MON133-21-16□	132.5	210	160	1.5
MON133-21-23□	132.5	210	230	1.8
MON133-21-28□	132.5	210	280	2.0
MON133-21-35□	132.5	210	350	2.3
MON133-26-23□	132.5	260	230	2.0
MON133-26-28□	132.5	260	280	2.3
MON133-26-35□	132.5	260	350	2.6
MON133-32-23□	132.5	320	230	2.3
MON133-32-28□	132.5	320	280	2.5
MON133-32-35□	132.5	320	350	2.9
MON133-32-45□	132.5	320	450	3.4
MON133-37-23□	132.5	370	230	2.5
MON133-37-28□	132.5	370	280	2.8
MON133-37-35□	132.5	370	350	3.2
MON133-37-45□	132.5	370	450	3.6
MON133-43-23□	132.5	430	230	2.7
MON133-43-28□	132.5	430	280	3.0
MON133-43-35□	132.5	430	350	3.5
MON133-43-45□	132.5	430	450	4.1

Product no. / Dimensions

Product no.	H	W	D	Weight (kg)
MON149-16-16□	149	160	160	1.3
MON149-16-23□	149	160	230	1.7
MON149-16-28□	149	160	280	1.9
MON149-21-16□	149	210	160	1.5
MON149-21-23□	149	210	230	1.9
MON149-21-28□	149	210	280	2.1
MON149-21-35□	149	210	350	2.4
MON149-26-23□	149	260	230	2.1
MON149-26-28□	149	260	280	2.4
MON149-26-35□	149	260	350	2.7
MON149-32-23□	149	320	230	2.4
MON149-32-28□	149	320	280	2.7
MON149-32-35□	149	320	350	3.1
MON149-32-45□	149	320	450	3.6
MON149-37-23□	149	370	230	2.6
MON149-37-28□	149	370	280	2.9
MON149-37-35□	149	370	350	3.3
MON149-37-45□	149	370	450	3.9
MON149-43-23□	149	430	230	2.9
MON149-43-28□	149	430	280	3.2
MON149-43-35□	149	430	350	3.6
MON149-43-45□	149	430	450	4.3
MON177-16-16□	177	160	160	1.6
MON177-16-23□	177	160	230	2.1
MON177-16-28□	177	160	280	2.3
MON177-21-16□	177	210	160	1.8
MON177-21-23□	177	210	230	2.3
MON177-21-28□	177	210	280	2.6
MON177-21-35□	177	210	350	3.0
MON177-26-23□	177	260	230	2.6
MON177-26-28□	177	260	280	2.9
MON177-26-35□	177	260	350	3.3
MON177-32-23□	177	320	230	2.8
MON177-32-28□	177	320	280	3.2
MON177-32-35□	177	320	350	3.7
MON177-32-45□	177	320	450	4.3
MON177-37-23□	177	370	230	3.1
MON177-37-28□	177	370	280	3.4
MON177-37-35□	177	370	350	3.9
MON177-37-45□	177	370	450	4.6
MON177-43-23□	177	430	230	3.4
MON177-43-28□	177	430	280	3.7
MON177-43-35□	177	430	350	4.3
MON177-43-45□	177	430	450	5.0

Product no.	H	W	D	Weight (kg)
MON199-16-16□	199	160	160	1.8
MON199-16-23□	199	160	230	2.2
MON199-16-28□	199	160	280	2.5
MON199-21-16□	199	210	160	2.0
MON199-21-23□	199	210	230	2.4
MON199-21-28□	199	210	280	2.7
MON199-21-35□	199	210	350	3.1
MON199-26-23□	199	260	230	2.7
MON199-26-28□	199	260	280	3.0
MON199-26-35□	199	260	350	3.4
MON199-32-23□	199	320	230	3.0
MON199-32-28□	199	320	280	3.3
MON199-32-35□	199	320	350	3.8
MON199-32-45□	199	320	450	4.5
MON199-37-23□	199	370	230	3.2
MON199-37-28□	199	370	280	3.6
MON199-37-35□	199	370	350	4.1
MON199-37-45□	199	370	450	4.7
MON199-43-23□	199	430	230	3.5
MON199-43-28□	199	430	280	3.9
MON199-43-35□	199	430	350	4.4
MON199-43-45□	199	430	450	5.2
MON222-16-16□	221.5	160	160	1.9
MON222-16-23□	221.5	160	230	2.3
MON222-16-28□	221.5	160	280	2.6
MON222-21-16□	221.5	210	160	2.1
MON222-21-23□	221.5	210	230	2.6
MON222-21-28□	221.5	210	280	2.9
MON222-21-35□	221.5	210	350	3.3
MON222-26-23□	221.5	260	230	2.9
MON222-26-28□	221.5	260	280	3.1
MON222-26-35□	221.5	260	350	3.6
MON222-32-23□	221.5	320	230	3.1
MON222-32-28□	221.5	320	280	3.5
MON222-32-35□	221.5	320	350	4.0
MON222-32-45□	221.5	320	450	4.8
MON222-37-23□	221.5	370	230	3.4
MON222-37-28□	221.5	370	280	3.8
MON222-37-35□	221.5	370	350	4.3
MON222-37-45□	221.5	370	450	5.0
MON222-43-23□	221.5	430	230	3.7
MON222-43-28□	221.5	430	280	4.1
MON222-43-35□	221.5	430	350	4.7
MON222-43-45□	221.5	430	450	5.5

MOY SERIES SYSTEM CASE with CARRYING HANDLE

- Available in 3 different colors and 160 different sizes.
- Lightweight system case with carrying handle. Suitable for use as measuring instruments, etc.
- Maximum load support of 20kg.

Assembly drawings

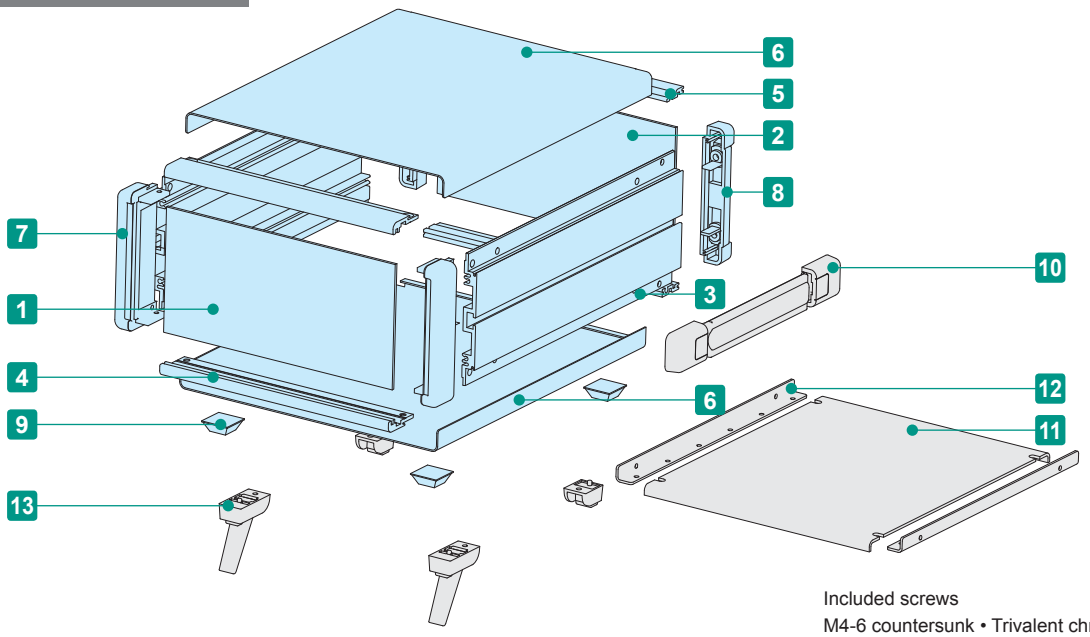

Included screws
M4-6 countersunk • Trivalent chromate x 4 pcs
M4-8 Pan head • Trivalent chromate x 8 pcs
M4-10 Binding head • Black trivalent chromate x 4 pcs

Components

No.	Part name	Pcs	Material	Color / Finish
1	Front panel	1	Aluminium A1050P t=2.0	Silver • Black / Hairline brushed & Anodized
2	Rear panel	1	Aluminium A1050P t=2.0	Silver • Black / Anodized
3	Side frame	2	Extruded aluminium A6063S-T5	Gray • Black / Painted
4	Front frame	2	Extruded aluminium A6063S-T5	Gray • Black / Painted
5	Rear frame	2	Extruded aluminium A6063S-T5	Silver / Anodized
6	Top • Bottom cover	1 each	Aluminium A1100P t=1.0	Light gray • Black / Painted
7	Corner block	2	Diecast aluminium ADC12	Gray • Black / Painted
8	Rear feet	2	ABS UL94V-0	Gray • Black
9	Rubber feet	4	Polyurethane	Black
10	Carrying handle	1	PP + Elastomer	Gray • Black

- Note: Front / rear panels and top / bottom covers are covered with a protective film on one side. Remove before assembly.

Accessories (Optional parts)

11 Mounting plate MSC series
See page MSC • MSCL-1

12 L-bracket MSCL series
See page MSC • MSCL-1

13 Tilt leg TL series
See page TL • CBF-1

Cable hook CBF series
See page TL • CBF-1

MOY dimensions

■ Drawings below are reference examples only.
DXF/DWG/PDF drawings available on our website.

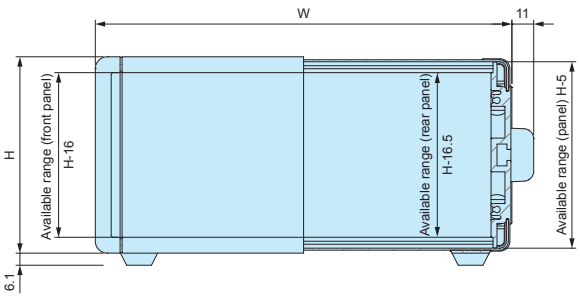

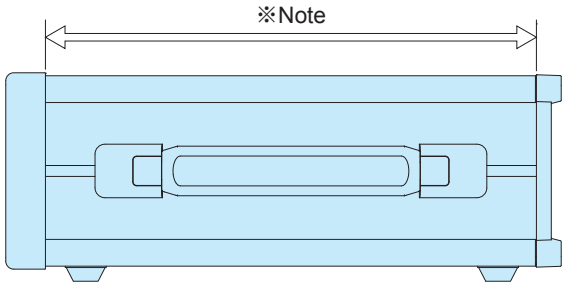

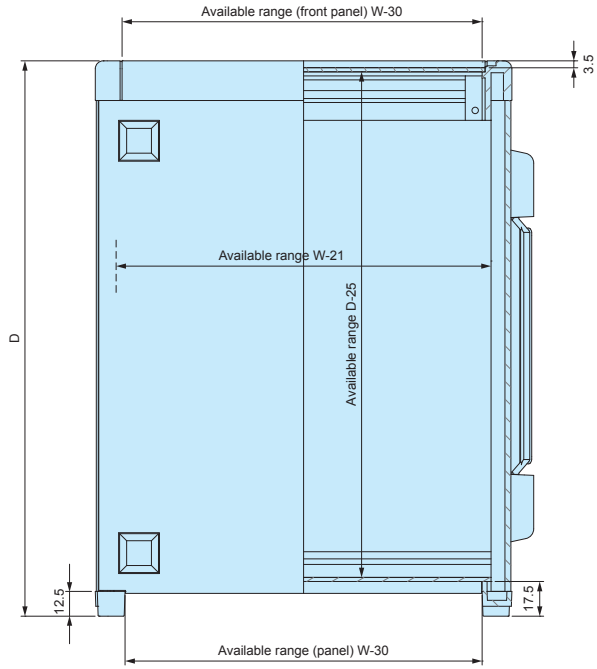

※Note
Carrying handle location can be freely affixed within denoted range.

Color Type

■ Please suffix color code at the end of the product number.

G

Panel	Silver
Top • Bottom cover	Light Gray
Side frame	Gray

B

Panel	Black
Top • Bottom cover	Black
Side frame	Black

BS

Panel	Silver
Top • Bottom cover	Black
Side frame	Black

Product no. / Dimensions

Product no.	H	W	D	Weight (kg)
MOY 66-16-23□	66	160	230	1.0
MOY 66-16-28□	66	160	280	1.1
MOY 66-21-23□	66	210	230	1.2
MOY 66-21-28□	66	210	280	1.3
MOY 66-21-35□	66	210	350	1.6
MOY 66-26-23□	66	260	230	1.3
MOY 66-26-28□	66	260	280	1.5
MOY 66-26-35□	66	260	350	1.8
MOY 66-32-23□	66	320	230	1.5
MOY 66-32-28□	66	320	280	1.7
MOY 66-32-35□	66	320	350	2.0
MOY 66-32-45□	66	320	450	2.4
MOY 66-37-23□	66	370	230	1.7
MOY 66-37-28□	66	370	280	1.9
MOY 66-37-35□	66	370	350	2.2
MOY 66-37-45□	66	370	450	2.6
MOY 66-43-23□	66	430	230	1.9
MOY 66-43-28□	66	430	280	2.1
MOY 66-43-35□	66	430	350	2.5
MOY 66-43-45□	66	430	450	3.0
MOY 88-16-23□	88	160	230	1.1
MOY 88-16-28□	88	160	280	1.3
MOY 88-21-23□	88	210	230	1.3
MOY 88-21-28□	88	210	280	1.5
MOY 88-21-35□	88	210	350	1.8
MOY 88-26-23□	88	260	230	1.5
MOY 88-26-28□	88	260	280	1.7
MOY 88-26-35□	88	260	350	2.0
MOY 88-32-23□	88	320	230	1.7
MOY 88-32-28□	88	320	280	1.9
MOY 88-32-35□	88	320	350	2.3
MOY 88-32-45□	88	320	450	2.7
MOY 88-37-23□	88	370	230	1.9
MOY 88-37-28□	88	370	280	2.1
MOY 88-37-35□	88	370	350	2.5
MOY 88-37-45□	88	370	450	2.9
MOY 88-43-23□	88	430	230	2.1
MOY 88-43-28□	88	430	280	2.3
MOY 88-43-35□	88	430	350	2.7
MOY 88-43-45□	88	430	450	3.3

Product no.	H	W	D	Weight (kg)
MOY 99-16-23□	99	160	230	1.2
MOY 99-16-28□	99	160	280	1.4
MOY 99-21-23□	99	210	230	1.4
MOY 99-21-28□	99	210	280	1.6
MOY 99-21-35□	99	210	350	1.8
MOY 99-26-23□	99	260	230	1.6
MOY 99-26-28□	99	260	280	1.8
MOY 99-26-35□	99	260	350	2.1
MOY 99-32-23□	99	320	230	1.8
MOY 99-32-28□	99	320	280	2.0
MOY 99-32-35□	99	320	350	2.4
MOY 99-32-45□	99	320	450	2.8
MOY 99-37-23□	99	370	230	2.0
MOY 99-37-28□	99	370	280	2.2
MOY 99-37-35□	99	370	350	2.6
MOY 99-37-45□	99	370	450	3.0
MOY 99-43-23□	99	430	230	2.2
MOY 99-43-28□	99	430	280	2.4
MOY 99-43-35□	99	430	350	2.8
MOY 99-43-45□	99	430	450	3.4
MOY133-16-23□	132.5	160	230	1.4
MOY133-16-28□	132.5	160	280	1.6
MOY133-21-23□	132.5	210	230	1.6
MOY133-21-28□	132.5	210	280	1.8
MOY133-21-35□	132.5	210	350	2.1
MOY133-26-23□	132.5	260	230	1.8
MOY133-26-28□	132.5	260	280	2.1
MOY133-26-35□	132.5	260	350	2.4
MOY133-32-23□	132.5	320	230	2.0
MOY133-32-28□	132.5	320	280	2.3
MOY133-32-35□	132.5	320	350	2.7
MOY133-32-45□	132.5	320	450	3.2
MOY133-37-23□	132.5	370	230	2.2
MOY133-37-28□	132.5	370	280	2.5
MOY133-37-35□	132.5	370	350	2.9
MOY133-37-45□	132.5	370	450	3.4
MOY133-43-23□	132.5	430	230	2.5
MOY133-43-28□	132.5	430	280	2.8
MOY133-43-35□	132.5	430	350	3.2
MOY133-43-45□	132.5	430	450	3.8

Product no. / Dimensions

Product no.	H	W	D	Weight (kg)
MOY149-16-23□	149	160	230	1.5
MOY149-16-28□	149	160	280	1.7
MOY149-21-23□	149	210	230	1.7
MOY149-21-28□	149	210	280	2.0
MOY149-21-35□	149	210	350	2.3
MOY149-26-23□	149	260	230	2.0
MOY149-26-28□	149	260	280	2.2
MOY149-26-35□	149	260	350	2.5
MOY149-32-23□	149	320	230	2.2
MOY149-32-28□	149	320	280	2.4
MOY149-32-35□	149	320	350	2.8
MOY149-32-45□	149	320	450	3.4
MOY149-37-23□	149	370	230	2.4
MOY149-37-28□	149	370	280	2.7
MOY149-37-35□	149	370	350	3.1
MOY149-37-45□	149	370	450	3.6
MOY149-43-23□	149	430	230	2.6
MOY149-43-28□	149	430	280	3.0
MOY149-43-35□	149	430	350	3.4
MOY149-43-45□	149	430	450	4.1
MOY177-16-23□	177	160	230	1.9
MOY177-16-28□	177	160	280	2.2
MOY177-21-23□	177	210	230	2.1
MOY177-21-28□	177	210	280	2.4
MOY177-21-35□	177	210	350	2.8
MOY177-26-23□	177	260	230	2.4
MOY177-26-28□	177	260	280	2.7
MOY177-26-35□	177	260	350	3.1
MOY177-32-23□	177	320	230	2.6
MOY177-32-28□	177	320	280	2.9
MOY177-32-35□	177	320	350	3.4
MOY177-32-45□	177	320	450	4.1
MOY177-37-23□	177	370	230	2.8
MOY177-37-28□	177	370	280	3.2
MOY177-37-35□	177	370	350	3.7
MOY177-37-45□	177	370	450	4.3
MOY177-43-23□	177	430	230	3.1
MOY177-43-28□	177	430	280	3.5
MOY177-43-35□	177	430	350	4.0
MOY177-43-45□	177	430	450	4.8

Product no.	H	W	D	Weight (kg)
MOY199-16-23□	199	160	230	2.0
MOY199-16-28□	199	160	280	2.3
MOY199-21-23□	199	210	230	2.2
MOY199-21-28□	199	210	280	2.5
MOY199-21-35□	199	210	350	2.9
MOY199-26-23□	199	260	230	2.5
MOY199-26-28□	199	260	280	2.8
MOY199-26-35□	199	260	350	3.2
MOY199-32-23□	199	320	230	2.7
MOY199-32-28□	199	320	280	3.1
MOY199-32-35□	199	320	350	3.6
MOY199-32-45□	199	320	450	4.2
MOY199-37-23□	199	370	230	3.0
MOY199-37-28□	199	370	280	3.3
MOY199-37-35□	199	370	350	3.8
MOY199-37-45□	199	370	450	4.5
MOY199-43-23□	199	430	230	3.6
MOY199-43-28□	199	430	280	3.9
MOY199-43-35□	199	430	350	4.5
MOY199-43-45□	199	430	450	5.2
MOY222-16-23□	221.5	160	230	2.2
MOY222-16-28□	221.5	160	280	2.4
MOY222-21-23□	221.5	210	230	2.4
MOY222-21-28□	221.5	210	280	2.7
MOY222-21-35□	221.5	210	350	3.1
MOY222-26-23□	221.5	260	230	2.7
MOY222-26-28□	221.5	260	280	2.9
MOY222-26-35□	221.5	260	350	3.4
MOY222-32-23□	221.5	320	230	2.9
MOY222-32-28□	221.5	320	280	3.3
MOY222-32-35□	221.5	320	350	3.8
MOY222-32-45□	221.5	320	450	4.6
MOY222-37-23□	221.5	370	230	3.2
MOY222-37-28□	221.5	370	280	3.5
MOY222-37-35□	221.5	370	350	4.1
MOY222-37-45□	221.5	370	450	4.8
MOY222-43-23□	221.5	430	230	3.5
MOY222-43-28□	221.5	430	280	3.8
MOY222-43-35□	221.5	430	350	4.4
MOY222-43-45□	221.5	430	450	5.3

MOR SERIES SYSTEM RACK MOUNT CASE

- Available in 3 different colors and 16 different sizes.
- Lightweight system rack mount case.
- Screws are hidden out of view for a sophisticated and elegant look.

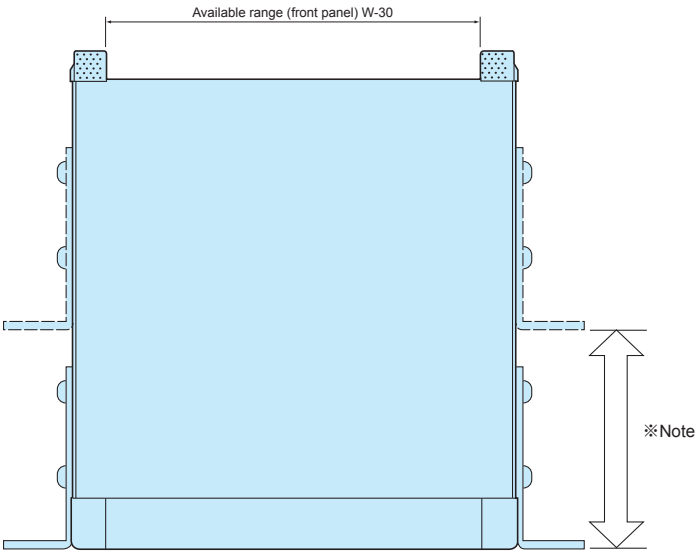

- Drawings below are reference examples only. DXF/DWG/PDF drawings available on our website.

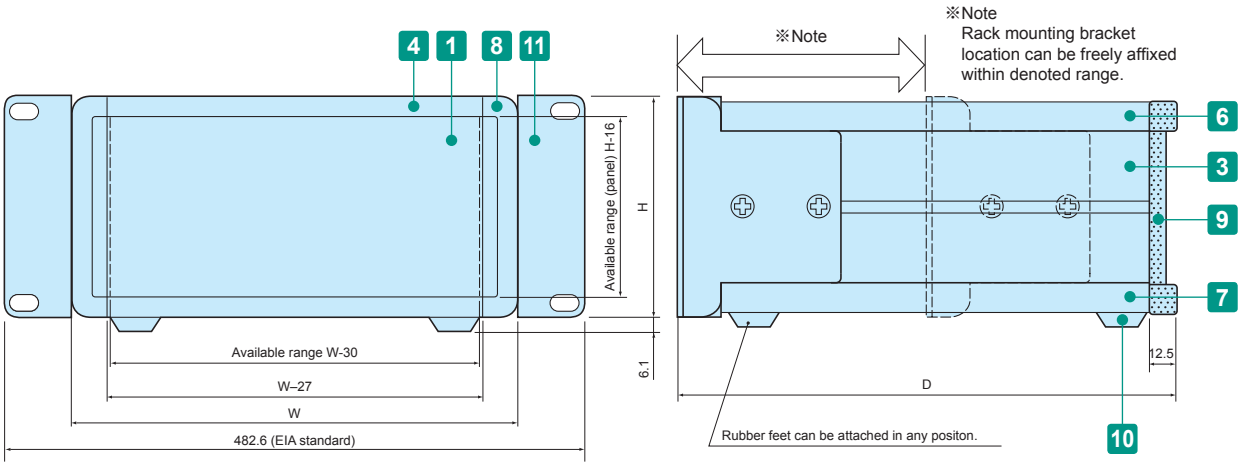

Components

No.	Part name	Pcs	Material	Color / Finish
1	Front panel	1	Aluminium A1050P t=2.0	Silver • Black / Hairline brushed & Anodized
2	Rear panel	1	Aluminium A1050P t=2.0	Silver • Black / Anodized
3	Side frame	2	Extruded aluminium A6063S-T5	Gray • Black / Painted
4	Front frame	2	Extruded aluminium A6063S-T5	Gray • Black / Painted
5	Rear frame	2	Extruded aluminium A6063S-T5	Silver / Anodized
6	Top cover	1	Aluminium A1100P t=1.0	Light gray • Black / Painted
7	Bottom cover	1	Aluminium A1100P t=1.0	Light gray • Black / Painted
8	Corner block	2	Diecast aluminium ADC12	Gray • Black / Painted
9	Rear feet	2	ABS UL94V-0	Gray • Black
10	Rubber feet	4	Polyurethane	Black
11	Rack mount bracket	2	Extruded aluminium A6063S-T5	Gray • Black / Painted

■ Note: Front / rear panels and top / bottom covers are covered with a protective film on one side. Remove before assembly.

Included screws and nuts
M4-6 countersunk • Trivalent chromate x 4 pcs
M4-8 Pan head • Trivalent chromate x 8 pcs
M4-10 Binding head • Black trivalent chromate x 4 pcs
M5-10 Flat head • Black trivalent chromate x 4 pcs
M5 nut (Product no. MZ-5) x 4 pcs

Accessories (Optional parts)

Mounting plate MSC series
See page MSC • MSCL-1

L-bracket MSCL series
See page MSC • MSCL-1

Aluminium handle OH series
See page OH • KH-1

Cable hook CBF series
See page TL • CBF-1

Color Type

G

Panel	Silver
Top • Bottom cover	Light Gray
Side frame	Gray

B

Panel	Black
Top • Bottom cover	Black
Side frame	Black

BS

Panel	Silver
Top • Bottom cover	Black
Side frame	Black

■ Please suffix color code at the end of the product number.

Product no. / Dimensions

Product no.	H	W	D	Weight (kg)
MOR 88-43-23 □	88	430	230	2.2
MOR 88-43-28 □	88	430	280	2.4
MOR 88-43-35 □	88	430	350	2.8
MOR 88-43-45 □	88	430	450	3.4
MOR133-43-23 □	132.5	430	230	2.7
MOR133-43-28 □	132.5	430	280	3.0
MOR133-43-35 □	132.5	430	350	3.4
MOR133-43-45 □	132.5	430	450	4.0
MOR177-43-23 □	177	430	230	3.4
MOR177-43-28 □	177	430	280	3.7
MOR177-43-35 □	177	430	350	4.3
MOR177-43-45 □	177	430	450	5.0
MOR222-43-23 □	221.5	430	230	3.8
MOR222-43-28 □	221.5	430	280	4.1
MOR222-43-35 □	221.5	430	350	4.7
MOR222-43-45 □	221.5	430	450	5.6

MSC series MOUNTING PLATE for MS

MSC dimensions

■ DXF/DWG/PDF/STP drawings available on our website.

■ 1 set = Mounting plate + L-bracket

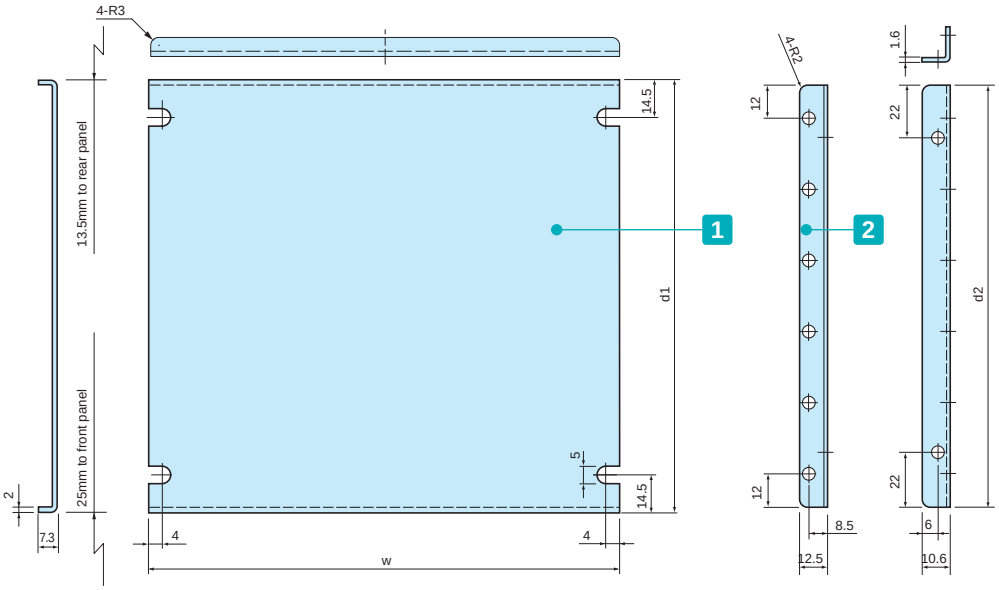

Mounting example

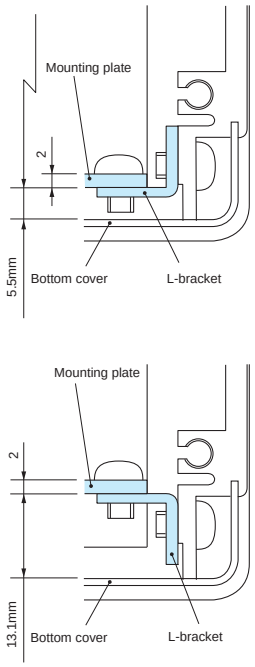

Components

No.	Part name	Pcs	Material	Color / Finish
1	Mounting plate	1	Aluminium A1050P t=2.0	Unfinished
2	L-bracket	2	Steel SPCC	Trivalent chromate

Included screws: M4-6 pan head, trivalent chromate x8

Product no. / Dimensions

Product no.	w	d1	d2	Enclosure W×D	Weight (g)
MSC16-16	130	96.5	91.5	160 × 160	120
MSC16-23	130	166.5	161.5	160 × 230	210
MSC16-28	130	216.5	211.5	160 × 280	270
MSC21-16	180	96.5	91.5	210 × 160	150
MSC21-23	180	166.5	161.5	210 × 230	250
MSC21-28	180	216.5	211.5	210 × 280	330
MSC21-35	180	286.5	281.5	210 × 350	430
MSC26-23	230	166.5	161.5	260 × 230	300
MSC26-28	230	216.5	211.5	260 × 280	390
MSC26-35	230	286.5	281.5	260 × 350	510
MSC32-23	290	166.5	161.5	320 × 230	360

Product no.	w	d1	d2	Enclosure W×D	Weight (g)
MSC32-28	290	216.5	211.5	320 × 280	460
MSC32-35	290	286.5	281.5	320 × 350	600
MSC32-45	290	386.5	381.5	320 × 450	810
MSC37-23	340	166.5	161.5	370 × 230	410
MSC37-28	340	216.5	211.5	370 × 280	520
MSC37-35	340	286.5	281.5	370 × 350	680
MSC37-45	340	386.5	381.5	370 × 450	910
MSC43-23	400	166.5	161.5	430 × 230	460
MSC43-28	400	216.5	211.5	430 × 280	590
MSC43-35	400	286.5	281.5	430 × 350	770
MSC43-45	400	386.5	381.5	430 × 450	1,040

MSCL series L-BRACKET for MS

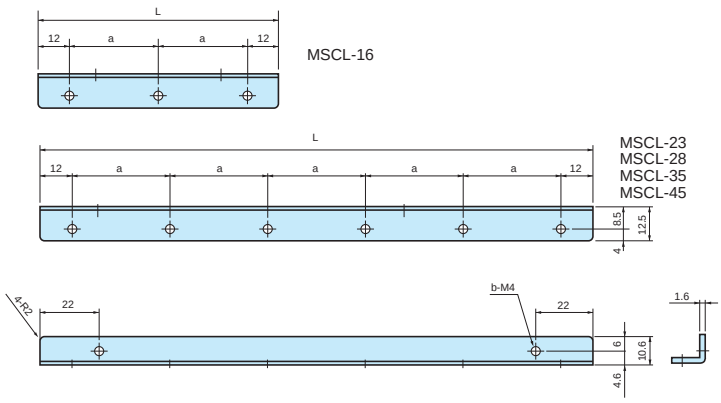

■ Use with your original mounting plate or PCB.

■ 1 pair of L-bracket are included with each MSC mounting plate.

Components

Part name	Material	Color / Finish
L-bracket	Steel SPCC	Trivalent chromate

Product no. / Dimensions

Product no.	L	a	b	Sales unit
MSCL-16	91.5	33.75	5	1 set (2 pcs)
MSCL-23	161.5	27.5	8	1 set (2 pcs)
MSCL-28	211.5	37.5	8	1 set (2 pcs)
MSCL-35	281.5	51.5	8	1 set (2 pcs)
MSCL-45	381.5	71.5	8	1 set (2 pcs)

MSM SERIES RACK MOUNT BRACKET

Components

Material	Color / Finish
Extruded aluminium A6063S-T5	Gray • Black / Painted

Included screws : M5-10 Flat head x 4 pcs / Black trivalent chromate + Nut x 4 pcs

Color Type

Color code	Material	Color / Finish
G	Extruded aluminium A6063S-T5	Gray / Painted
B	Extruded aluminium A6063S-T5	Black / Painted

Product no. / Dimensions

Product no.	h (Enclosure H)	a	Pack of
MSM- 88□	88	76.2	2
MSM-133□	132.5	57.1	2
MSM-177□	177	101.6	2
MSM-222□	221.5	146	2

■ Please suffix color code at the end of the product number.

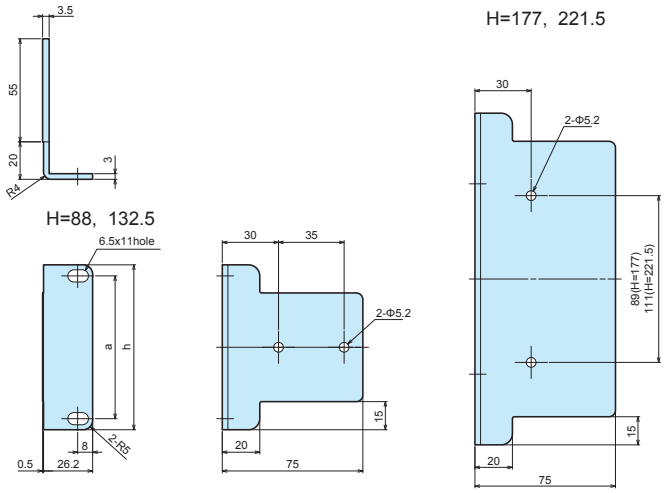

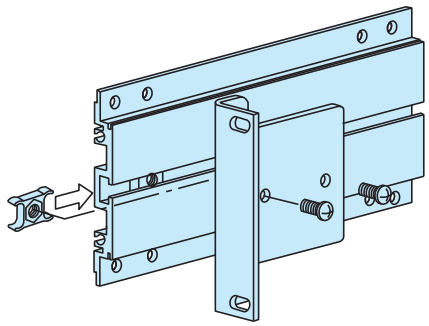

MZ SERIES SIDE FRAME NUT

■ Side frame nut for MS • MSN • MSY • MSR • MO • MON • MOY • MOR series.

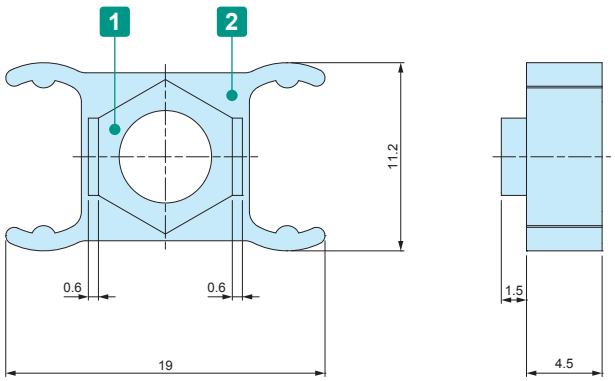

Components

No.	Part name	Material	Color / Finish
1	Nut	Brass • Steel	Nickel plated
2	Holder	Polyethylene	Black

Product no. / Feature

Product no.	Screw size	Nut material	Pack of
MZ-4	M4	Brass	10
MZ-5	M5	Steel	10

TL series TILT LEG

TL dimensions

■ DXF/DWG/PDF drawings available on our website.

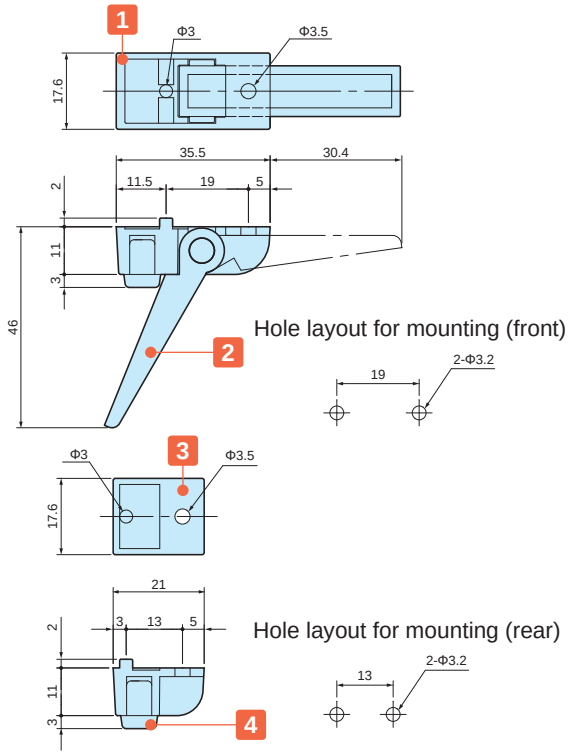

Components

＊Maximum load = 7 kg

No.	Part name	Pcs	Material	Color / Finish
1	Front feet	2	ABS UL94HB	Black • Gray • Light gray
2	Leg	2	ABS UL94HB	Black • Gray • Light gray
3	Rear feet	2	ABS UL94HB	Black • Gray • Light gray
4	Rubber feet	4	EPDM	Gray • Black
–	Screw	4	Steel	Black trivalent chromate

■ Included screws: M3-8 and M3 nut (with washer) set.

Product no. / Dimensions

Product no.	Color (body)	Color (rubber feet)	Sales unit
● TL-45BB	Black	Black	1 set
● TL-45GG	Gray	Gray	1 set
● TL-45SG	Light gray	Gray	1 set

■ EPDM (black) may have its color migrate onto the placement surface.

MS SERIES INSTALLATION AREA

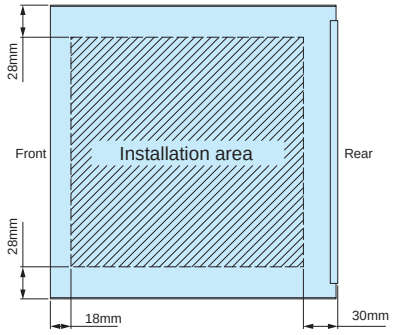

CBF-1G CABLE HOOK

APPLICATION EXAMPLE

■ Used for wrapping and securing cords and wires.
■ Can be used with a variety of different enclosure series and models.
■ Requires a panel thickness of between 1.0 ~ 3.0mm.

Product no. / Dimensions

Product no.	Material	Color	Pack of
CBF-1G	ABS UL94HB	Gray	4

■ Included screws: M3-8 trivalent chromate (with washer) x 4 pcs

CBF dimensions

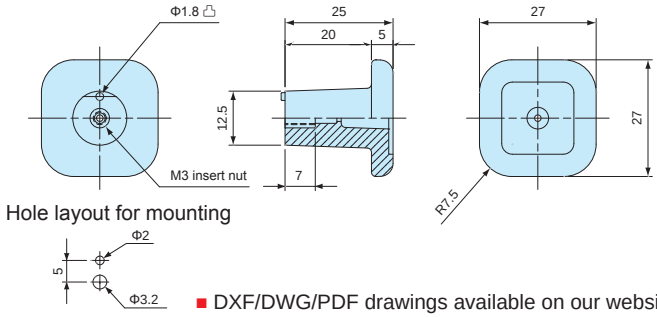

■ DXF/DWG/PDF drawings available on our website.

MB SERIES ALUMINIUM CASE

NEW SIZE

- Simple, low-cost aluminium case. Addition of 8 sizes for a total of 49 different selectable sizes.
- The inner surface is unfinished, allowing the enclosure to be conductive.
- Custom size available.

MB dimensions

- Drawings below are reference examples only. DXF/DWG/PDF drawings available on our website.

Base : A type (Standard)

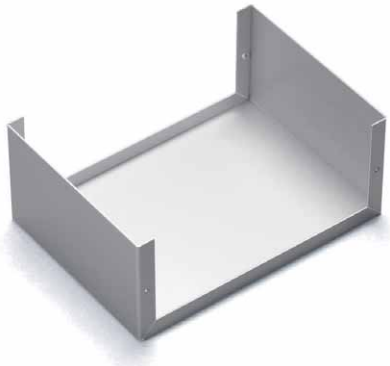

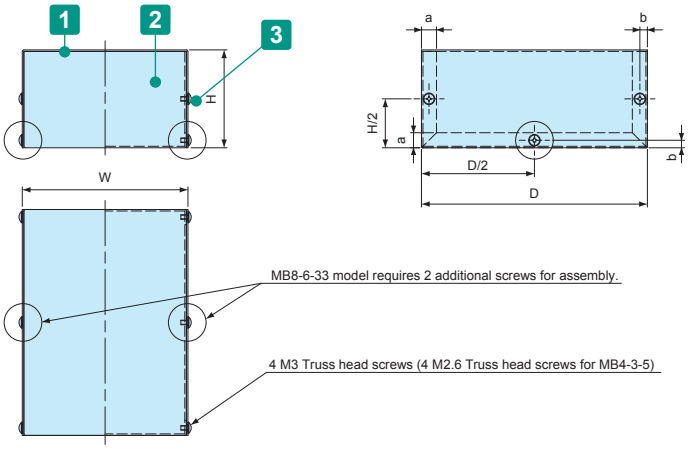

Base : B type (Reinforced)

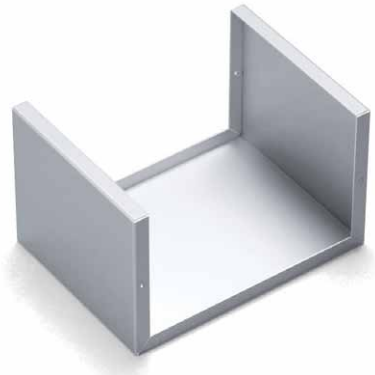

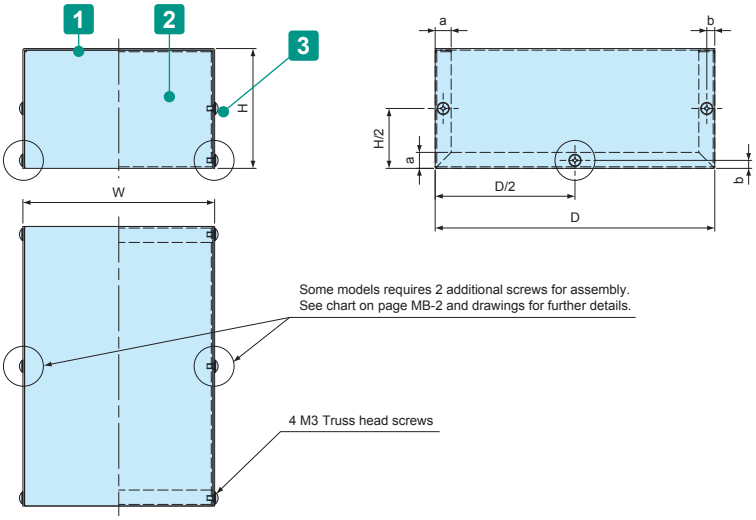

Components

No.	Part name	Pcs	Material	Color / Finish
1	Cover	1	Aluminium A1100P	Metallic silver / Painted : Conductive inside
2	Base	1	Aluminium A1100P	Metallic silver / Painted : Conductive inside
3	Screw	4 / 6	Brass	Nickel plated
	Washer	4 / 6	Brass	Nickel plated

Product no. / Dimensions

	Product no.	W	H	D	a	b	Thickness (t)	Screw pcs	Base type	Weight (g)
	MB 4 -3 -5	35	25	45	10	5	1.0	4	A	23
	MB 4- 3- 6	40	30	55	10	5	1.0	4	A	32
	MB 5- 4- 7	50	40	70	10	5	1.0	4	A	51
	MB 5- 5-16	50	45	160	10	5	1.0	4	A	103
	MB 6- 4-25	55	40	250	10	5	1.0	4	A	153
	MB 6- 5- 9	60	45	85	10	5	1.0	4	A	69
	MB 6- 5-12	60	50	120	10	5	1.0	4	A	97
	MB 7- 5-10	70	50	100	10	5	1.0	4	A	92
	MB 8- 6-33	75	55	325	10	5	1.0	6	A	270
	MB 8- 3-11	80	25	110	10	5	1.0	4	A	89
	MB 8- 6- 8	80	55	80	10	5	1.0	4	A	91
	MB 8- 6-15	80	55	150	10	5	1.0	4	A	144
	MB 8- 7- 9	80	70	90	10	5	1.0	4	A	111
	MB 8- 7-18	80	70	180	10	5	1.0	4	A	190
	MB 9- 3- 9	90	25	90	10	5	1.0	4	A	72
	MB 9- 6-13	90	60	125	10	5	1.0	4	A	142
NEW	MB10- 5- 7	100	50	70	10	5	1.0	4	A	91
	MB10- 7-20	100	65	200	10	5	1.0	4	A	228
	MB10- 9-12	100	90	120	10	5	1.0	4	B	189
	MB11- 3-14	110	30	140	10	5	1.0	4	A	129
	MB11- 7-15	110	65	150	10	5	1.0	4	A	192
NEW	MB11- 7-11	110	70	110	10	5	1.0	4	A	159.5
	MB11- 8-25	110	75	250	10	5	1.0	4	B	317
	MB12- 3-12	120	25	120	10	5	1.0	4	A	115
	MB12- 5-18	120	50	175	10	5	1.0	4	B	200
	MB12- 8-18	120	75	175	10	5	1.0	4	B	252
	MB12-10-16	120	100	160	10	5	1.0	4	B	277
	MB13- 3-18	130	30	180	10	5	1.0	4	A	183
NEW	MB13- 6- 9	130	60	90	10	5	1.0	4	A	143.5
	MB14- 5-20	140	50	200	10	5	1.0	4	B	250
	MB14- 6-14	140	60	140	10	5	1.0	4	B	214
	MB14- 8-20	140	75	200	10	5	1.0	4	B	312
	MB15- 3-15	150	30	150	10	5	1.0	4	A	176
	MB15- 3-21	150	30	210	10	5	1.0	4	A	236
NEW	MB15- 7-10	150	70	100	10	5	1.0	4	A	186
	MB15-12-20	150	120	200	10	5	1.2	4	B	494
	MB16- 6-25	160	60	250	10	5	1.0	4	B	358
	MB16- 9-25	160	85	250	10	5	1.0	4	B	431
NEW	MB18- 8-13	180	75	130	10	5	1.0	4	B	272
	MB18-14-23	180	140	230	10	5	1.2	4	B	665
	MB19- 9-30	190	85	300	10	5	1.2	4	B	673
NEW	MB20- 8-15	200	80	150	10	5	1.2	4	B	400
	MB20- 8-20	200	80	200	10	5	1.2	4	B	492
	MB21- 9-35	210	90	350	10	5	1.2	6	B	843
	MB21-16-26	210	160	260	12	6	1.5	4	B	1,091
	MB23-10-40	230	100	400	10	5	1.2	6	B	1,051
	MB24-18-29	240	180	290	12	6	1.5	4	B	1,381
NEW	MB25-10-18	250	100	175	10	5	1.2	4	B	588.5
NEW	MB30-12-20	300	120	200	10	5	1.2	4	B	815

Accessories (Optional parts)

Rubber feet B, A-P, TP series
See page Feet 1 ~ 4

Torx screw MR3-5Z
See page MR • FDR-1

Conductive screw EV3-5S
See page EV-1

Adhesive standoff T-600, T-700, ASR series
See page Standoff-1

MBC SERIES FLANGED ALUMINIUM BOX

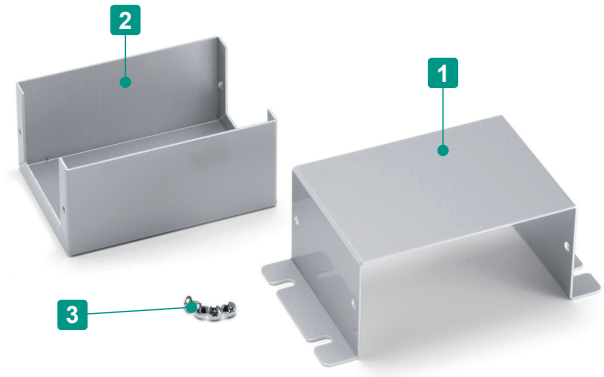

- Flanged aluminium case for wall mounting application.
- Suitable for use as a switch box or controller.
- The internal surface is unfinished, making conductive and grounding possible.
- Custom size available.

Components

No.	Part name	Pcs	Material	Color / Finish
1	Cover	1	Aluminium A1100P	Metallic silver / Painted : Unfinished internal surface
2	Base	1	Aluminium A1100P	Metallic silver / Painted : Unfinished internal surface
3	Screw (Truss M3-5)	4	Brass	Nickel plated
	Washer	4	Brass	Nickel plated

Accessories (Optional parts)

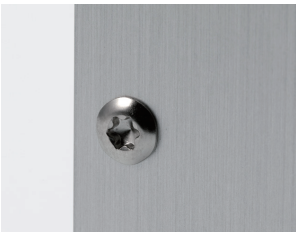

TORX screw MR3-5Z
See page MR-1

Conductive screw EV3-5S
See page EV-1

Insert nut adhesive standoff AST series
See page AST-1

MBC dimensions

■ Detailed DXF/DWG drawings available online.

MBC5-4-7～MBC13-6-9

Base : A type (Standard)

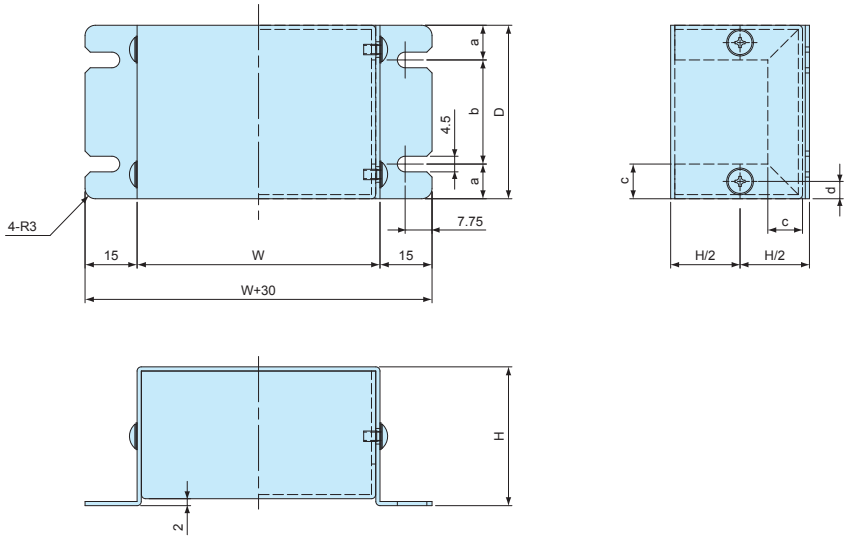

MBC14-4-20～MBC20-8-15

Base : B type (Reinforced)

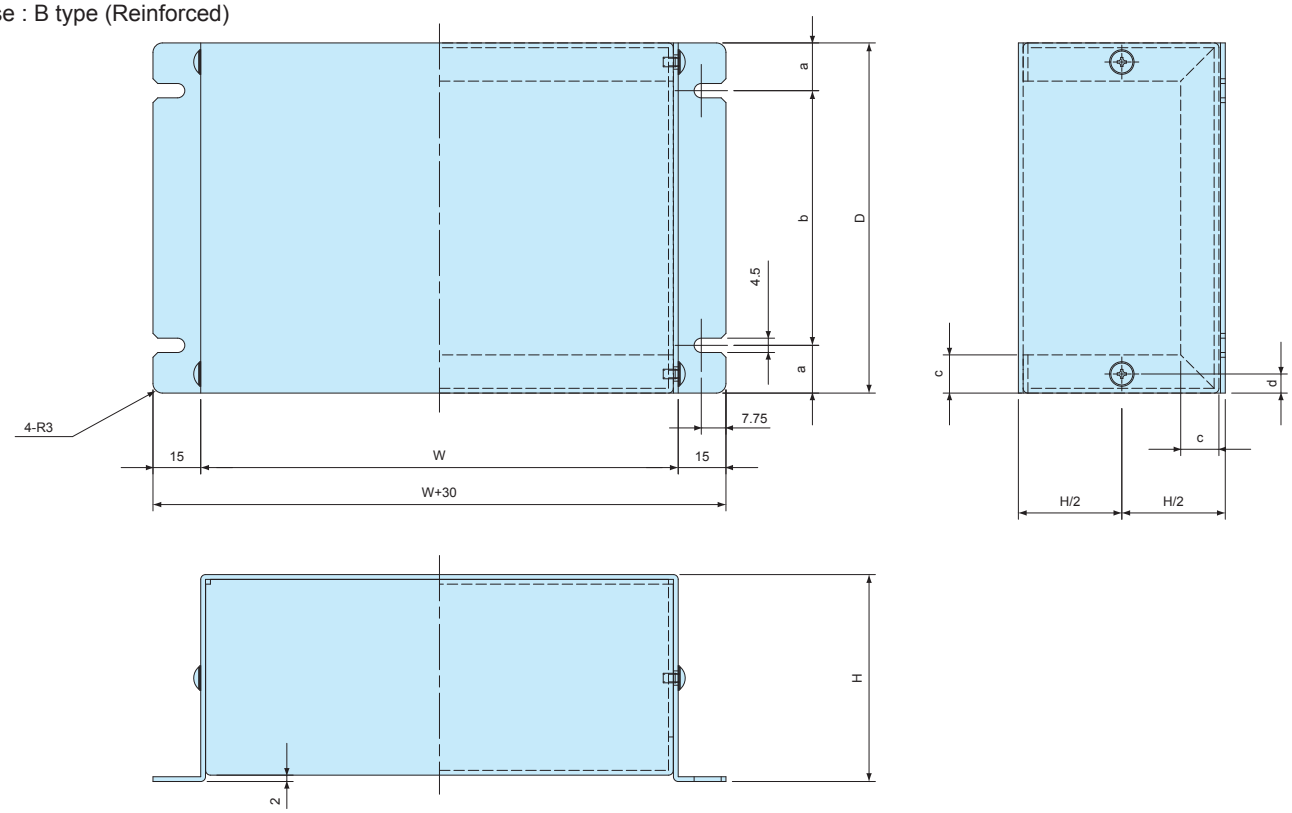

Product no. / Dimensions

Product no.	W	H	D	a	b	c	d	Thickness	Base type	Weight (g)
MBC 5-4- 7	50	40	70	15	40	10	5	1.2	A	64
MBC 7-4- 5	70	40	50	10	30	10	5	1.2	A	62
MBC 7-4-10	70	40	100	15	70	10	5	1.2	A	102
MBC 8-5-12	80	50	120	15	90	12	6	1.5	A	180
MBC10-4-15	100	40	150	20	110	12	6	1.5	A	224
MBC10-5- 7	100	50	70	15	40	10	5	1.2	A	112
MBC10-7-15	100	65	150	20	110	12	6	1.5	A	280
MBC13-6- 9	125	60	90	15	60	12	6	1.5	A	210
MBC14-4-20	135	40	200	25	150	12	6	1.5	B	367
MBC15-7-11	150	65	110	15	80	12	6	1.5	B	298
MBC17-4-25	170	40	250	30	190	12	6	1.5	B	527
MBC18-7-13	175	70	130	15	100	12	6	1.5	B	389
MBC20-8-15	200	75	150	20	110	12	6	1.5	B	490

MBH SERIES VENTILATED ALUMINIUM CASE

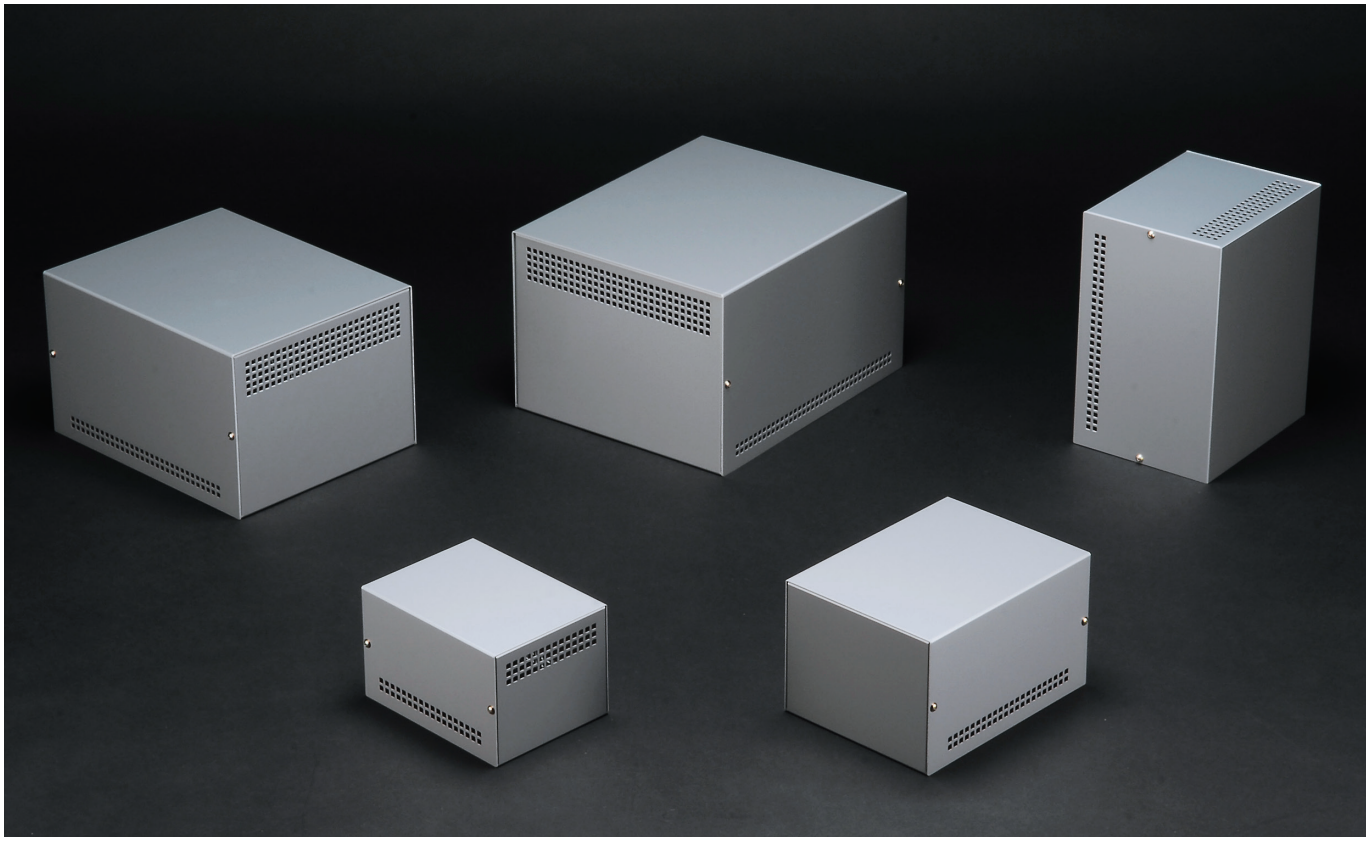

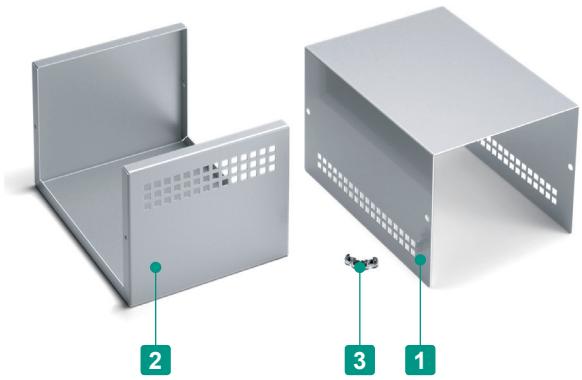

- Ventilation holes are punched on the lower side of the cover (both sides) and the upper side of the base (one side) for enhancing airflow.
- The internal surface is unfinished, making conductive and grounding possible.

Components

No.	Part name	Pcs	Material	Color / Finish
1	Cover	1	Aluminium A1100P	Metallic silver / Painted : Unfinished internal surface
2	Base	1	Aluminium A1100P	Metallic silver / Painted : Unfinished internal surface
3	Screw (Truss M3-5)	4	Brass	Nickel plated
	Washer	4	Brass	Nickel plated

MBH dimensions

■ Detailed DXF/DWG/PDF drawings available online.

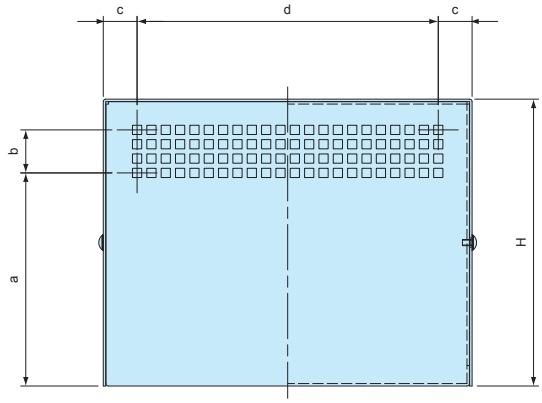

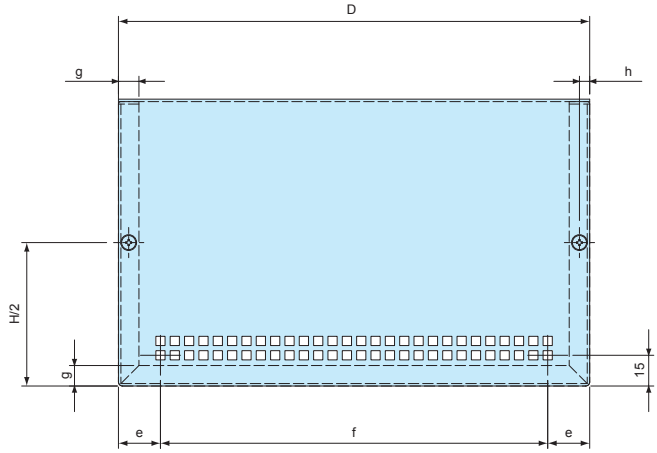

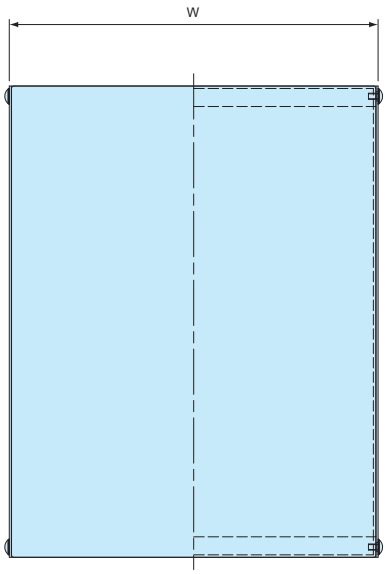

Detail: Ventilation hole

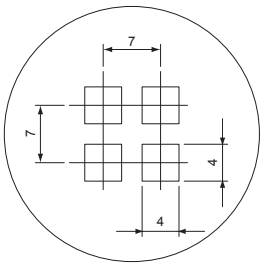

Number of Ventilation Hole

Product no.	Cover	Base
MBH10- 9-12	24×2 faces	36
MBH12-10-16	36×2 faces	42
MBH15-12-20	44×2 faces	72
MBH18-14-23	56×2 faces	88
MBH21-16-26	60×2 faces	130
MBH24-18-29	72×2 faces	150

Product no. / Dimensions

Product no.	W	H	D	a	b	c	d	e	f	g	h	Thickness	Weight (g)
MBH10- 9-12	100	90	120	64.5	14	11.5	77	21.5	77	10	5	1.0	190
MBH12-10-16	120	100	160	71	14	14.5	91	20.5	119	10	5	1.0	265
MBH15-12-20	150	120	200	84	21	15.5	119	26.5	147	10	5	1.2	476
MBH18-14-23	180	140	230	104	21	16.5	147	20.5	189	10	5	1.2	655
MBH21-16-26	210	160	260	117	28	17.5	175	28.5	203	12	6	1.5	1,068
MBH24-18-29	240	180	290	137	28	18.5	203	22.5	245	12	6	1.5	1,354

Accessories (Optional parts)

Rubber feet B series
See page Feet-1～Feet-4

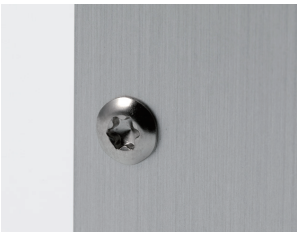

TORX screw MR3-5Z
See page MR-1

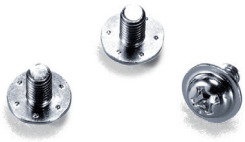

Conductive screw EV3-5S
See page EV-1

Insert nut adhesive standoff AST series
See page AST-1

EV3-5S CONDUCTIVE SCREW

Conductive

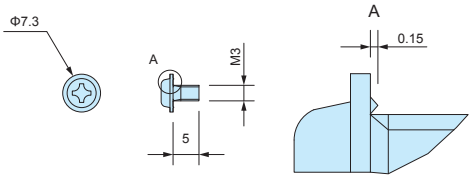

- When tightened, protrusions on the underside of the screw head will shave away at painted or anodized surface to expose the base material for achieving conductivity.

Product no. / Dimensions

Product no.	M	L	Material	Finish	Pack of
EV3-5S	3	5	Steel	Nickel plated	20

CU-N SERIES UNIVERSAL PROJECT BOX

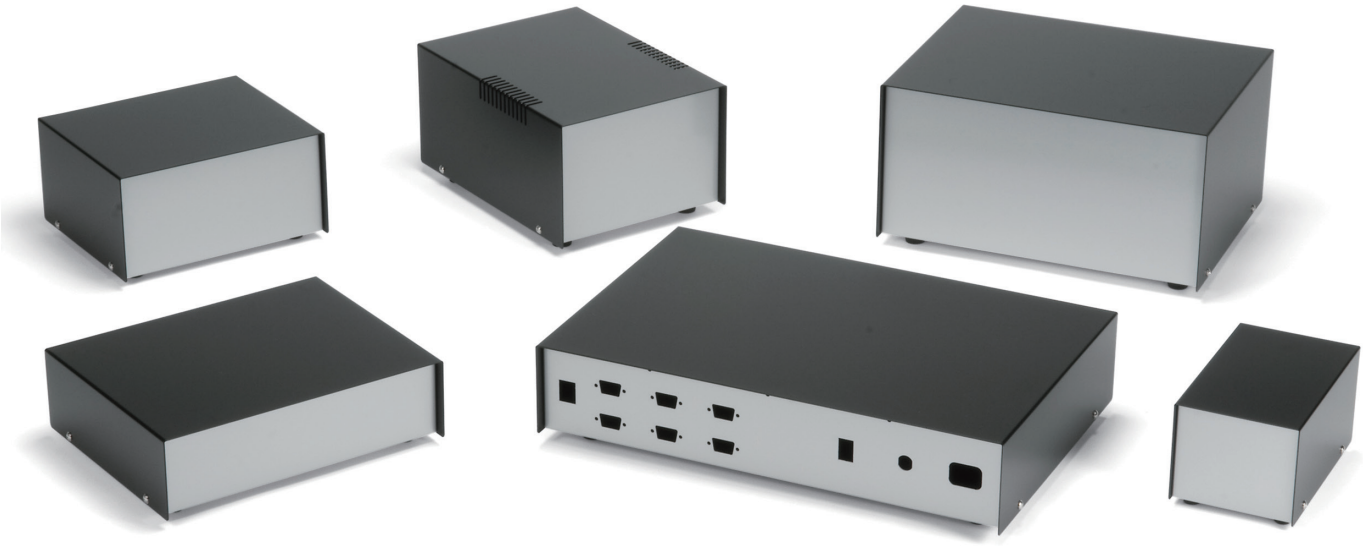

■ The internal surface is unfinished, making conductive and grounding possible.

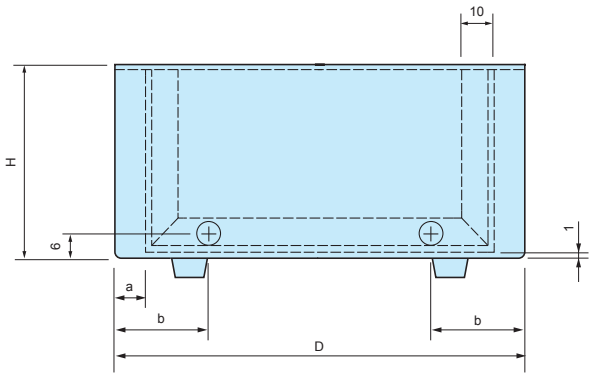

Side view for CU-2N, 12N, 13N and 21N

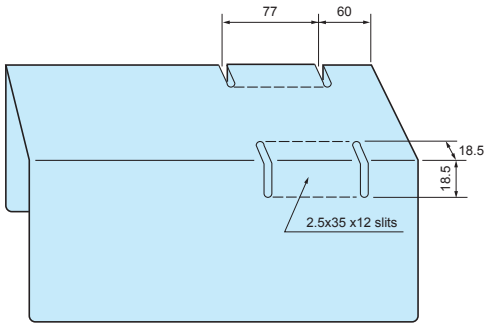

Ventilation slits on CU-23N only

Components

No.	Part name	Pcs	Material	Color / Finish
1	Cover	1	Steel SPCC t=1.0	Black / Painted
2	Base	1	Aluminium A1100P	Metallic silver / Painted : Unfinished internal surface
3	Rubber feet	4	Synthetic rubber	Black

CU-N dimensions

■ Detailed DXF/DWG drawings available online.

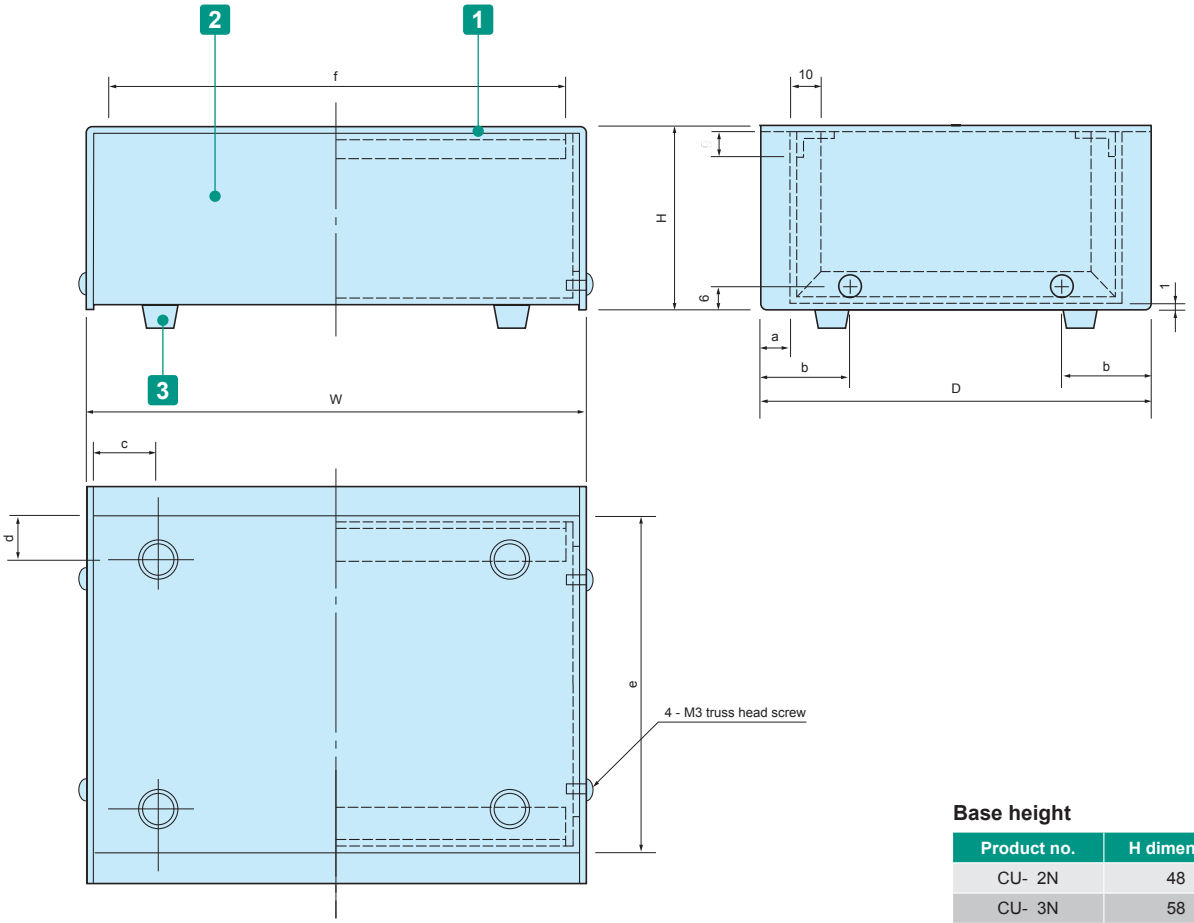

Included screws : Truss head M3-5, Nickel plated x 4 pcs (all models)
M3 flat washer, Nickel plated x 4 pcs (all models)

Pan head M3-8, Trivalent chromate x 4 pcs
(CU-2N, 12N, 13N, and 21N)

Pan head M3-10, Trivalent chromate x 4 pcs
(CU-3N, 4N, 14N, 15N, and 22N)

Pan head with washer M3-10, Trivalent chromate x 4 pcs
(CU-5N, 6N, 16N, 17N, 23N, and 33N)

Base height

Product no.	H dimension
CU- 2N	48
CU- 3N	58
CU- 4N	68
CU- 5N	83
CU- 6N	97.8
CU-12N	58
CU-13N	73
CU-14N	88
CU-15N	98
CU-16N	118
CU-17N	148
CU-21N	83
CU-22N	88
CU-23N	117.8
CU-33N	77.8

Product no. / Dimensions

Product no.	W	H	D	a	b	c	d	e	f	g	Thickness	Weight (g)
CU- 2N	160	50	150	7.5	25	15	15	135	–	–	1.0	415
CU- 3N	200	60	170	7.5	30	20	20	155	190	7	1.0	635
CU- 4N	250	70	200	10	35	20	20	180	240	7	1.0	905
CU- 5N	300	85	220	10	35	25	25	200	290	7	1.2	1,250
CU- 6N	350	100	240	10	40	25	25	220	340	7	1.2	1,620
CU-12N	90	60	110	5	20	12	12	100	–	–	1.0	250
CU-13N	120	75	140	5	25	15	15	130	–	–	1.0	400
CU-14N	160	90	150	7.5	25	15	15	135	150	7	1.0	600
CU-15N	200	100	170	7.5	30	20	20	155	190	7	1.0	785
CU-16N	250	120	200	10	35	25	25	180	240	7	1.2	1,200
CU-17N	300	150	225	10	35	25	25	205	290	7	1.2	1,620
CU-21N	100	85	165	5	30	12	15	155	–	–	1.0	450
CU-22N	150	90	220	7.5	35	15	20	205	140	7	1.0	775
CU-23N	180	120	250	10	40	20	25	230	170	7	1.2	1,160
CU-33N	400	80	265	10	45	30	30	245	390	7	1.2	1,820

TAKACHI

HU-N SERIES
UNIVERSAL PROJECT BOX

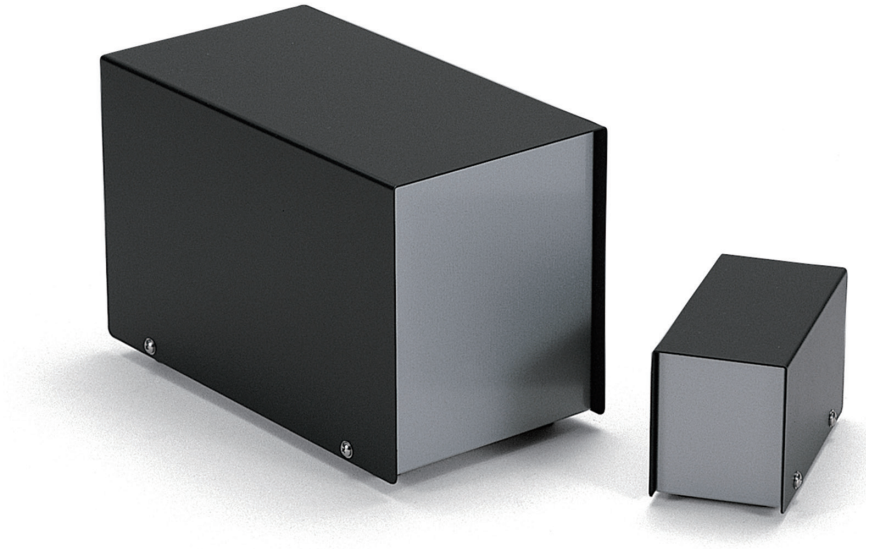

HU-N dimensions

■ Detailed DXF/DWG drawings available online.

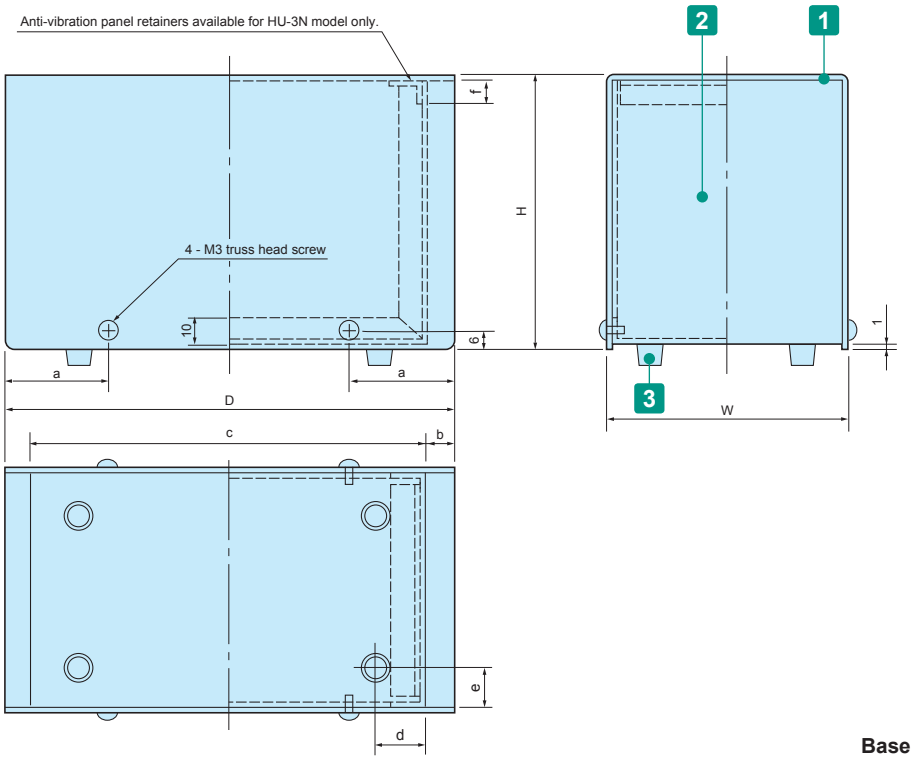

■ The internal surface is unfinished, making conductive and grounding possible.

Included screws:
Truss head M3-5, Nickel plated x 4 pcs (all models)
M3 flat washer, Nickel plated x 4 pcs (all models)
Pan head M3-10, Trivalent chromate x 4 pcs (HU-3N model only)
Pan head M3-8, Trivalent chromate x 4 pcs (HU-2N model only)

Base height

Product no.	H dimension
HU-1N	68
HU-2N	103
HU-3N	138

Components

No.	Part name	Pcs	Material	Color / Finish
1	Cover	1	Steel SPCC t=1.0	Black / Painted
2	Base	1	Aluminium A1100P	Metallic silver / Painted : Unfinished internal surface
3	Rubber feet	4	Synthetic rubber	Black

Product no. / Dimensions

Product no.	W	H	D	a	b	c	d	e	f	Weight (g)
HU-1N	60	70	120	25	5	110	15	12	–	240
HU-2N	85	105	170	30	5	160	15	12	–	505
HU-3N	120	140	220	35	7.5	205	20	15	7	905

TS SERIES

SLOPED DESKTOP ENCLOSURE

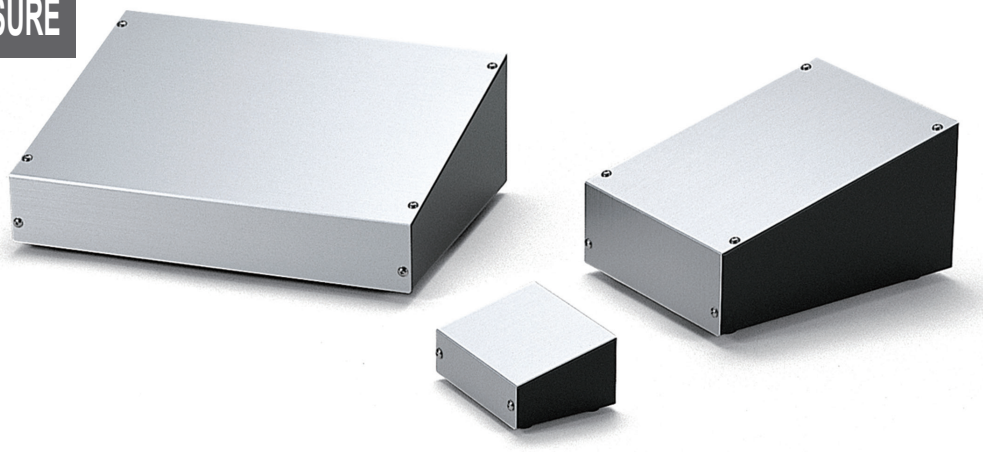

TS dimensions

■ Detailed DXF/DWG drawings available online.

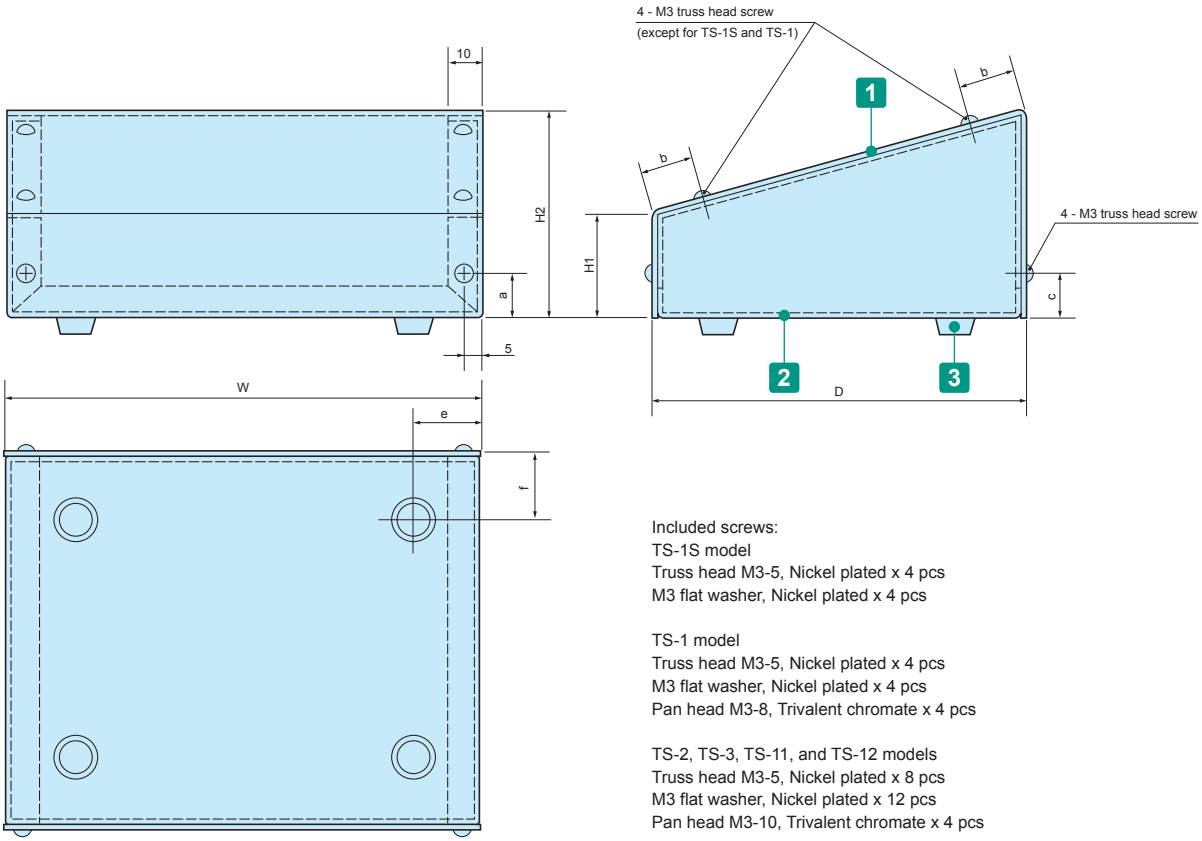

Included screws:
TS-1S model
Truss head M3-5, Nickel plated x 4 pcs
M3 flat washer, Nickel plated x 4 pcs

TS-1 model
Truss head M3-5, Nickel plated x 4 pcs
M3 flat washer, Nickel plated x 4 pcs
Pan head M3-8, Trivalent chromate x 4 pcs

TS-2, TS-3, TS-11, and TS-12 models
Truss head M3-5, Nickel plated x 8 pcs
M3 flat washer, Nickel plated x 12 pcs
Pan head M3-10, Trivalent chromate x 4 pcs

Components

No.	Part name	Pcs	Material	Color / Finish
1	Cover	1	Aluminium A1050P t=1.0	Silver / Hairline brushed & Anodized
2	Base	1	Aluminium A1100P t=1.0	Black
3	Rubber feet	4	Synthetic rubber	Black

Product no. / Dimensions

Product no.	W	H1	H2	D	a	b	c	e	f	Weight (g)
TS- 1S	100	30	47.5	75	15	–	23	12	13	100
TS- 1	140	35	58	100	17.5	–	29	15	16	175
TS- 2	200	35	70	150	15	15	15	20	21	315
TS- 3	290	50	99	210	15	20	15	25	26	615
TS-11	110	35	70	150	15	15	15	15	16	205
TS-12	150	60	107	200	15	15	15	20	21	380

YM SERIES FLAT ALUMINIUM CASE

YM dimensions

■ Drawings below are reference examples only.
DXF/DWG/PDF drawings available on our website.

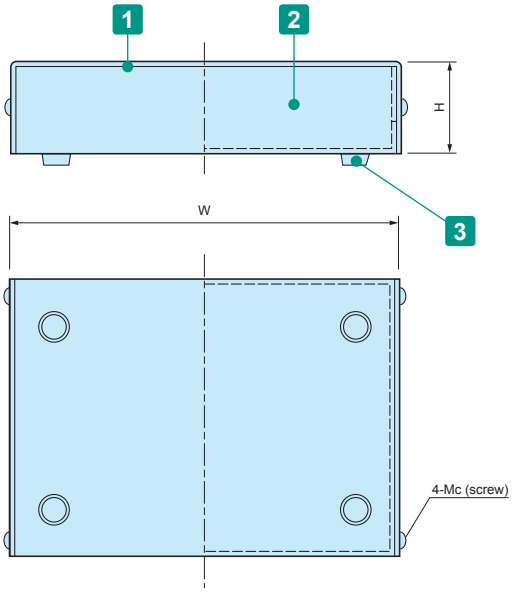

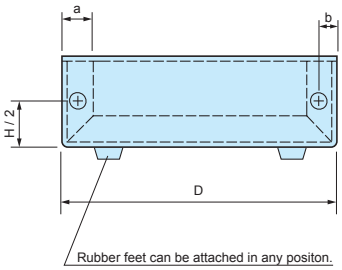

Included screws and washers
Truss head • Nickel plated x 4 pcs
(YM-30, 40 = M2-5)
(YM-65, 90, 115 = M2.6-5)
(Others = M3-5)
Flat washer • Nickel plated x 4 pcs
(YM-30, 40 = M2)
(YM-65, 90, 115 = M2.6)
(Others = M3)

Components

No.	Part name	Pcs	Material	Color / Finish
1	Cover	2	Aluminium A1050P t = 1.0	Silver / Hairline brushed & Anodized
2	Base	2	Aluminium A1100P t = 1.0	Black / Painted • Silver
3	Rubber feet	4	Synthetic rubber	Black
-	Screw	1 set	Brass	Nickel plated

Note: The cover and base are covered with a protective film on one side. Remove before assembly.

Product no. / Dimensions

Product no.	W	H	D	a	b	c	Weight (g)
YM- 30	30	18	25	8	4	2	12
YM- 40	40	22	30	8	4	2	18
YM- 50	50	30	45	10	5	3	36
YM- 65	65	20	50	10	5	2.6	40
YM- 80	80	30	50	10	5	3	53
YM- 90	90	20	60	10	5	2.6	55
YM-100	100	30	70	10	5	3	80
YM-115	115	20	80	10	5	2.6	80
YM-130	130	30	90	10	5	3	115
YM-150	150	40	100	10	5	3	155

Accessories (Optional parts)

■ MR3-5Z and EV3-5S are not applicable for YM-30, 40, 65, 90, and 115 models.

TORX screw MR3-5Z
See page MR • FDR-1

Conductive screw EV3-5S
See page EV-1

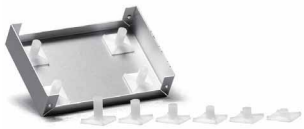

Adhesive standoff T-600, T-700, ASR
See page Standoff-1

YM dimensions

■ Drawings below are reference examples only.
DXF/DWG/PDF drawings available on our website.

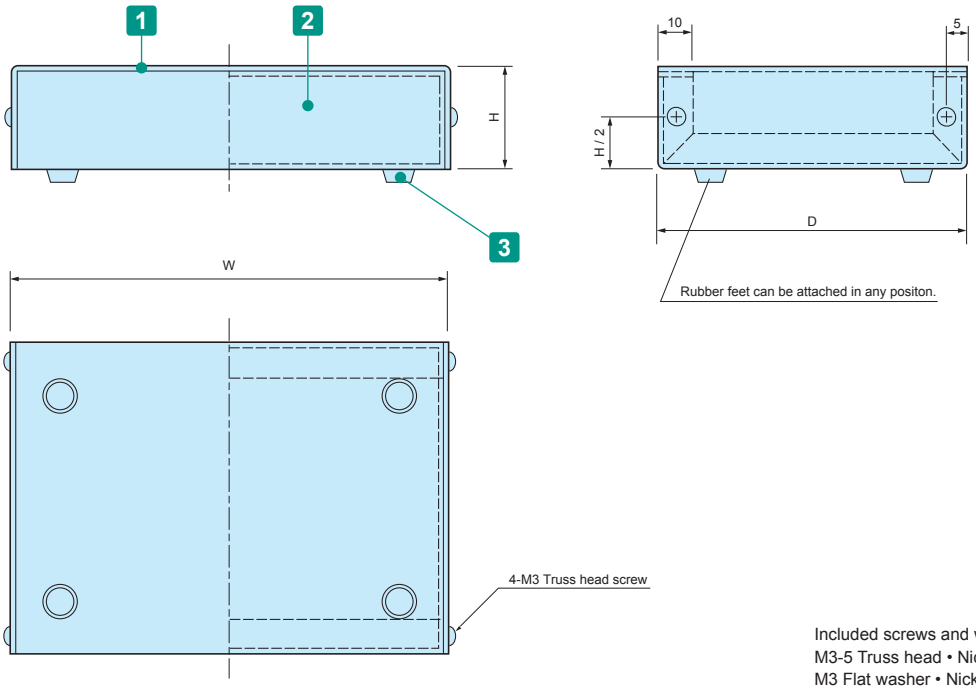

Included screws and washers
M3-5 Truss head • Nickel plated x 4 pcs
M3 Flat washer • Nickel plated x 4 pcs

Components

No.	Part name	Pcs	Material	Color / Finish
1	Cover	2	Aluminium A1050P t = 1.0	Silver / Hairline brushed & Anodized
2	Base	2	Aluminium A1100P t = 1.0	Black / Painted • Silver
3	Rubber feet	4	Synthetic rubber	Black
-	Screw	1 set	Brass	Nickel plated

■ Note: The cover and base are covered with a protective film on one side. Remove before assembly.

Product no. / Dimensions

Product no.	W	H	D	Weight (g)
YM-180	180	40	130	230
YM-200	200	40	150	280
YM-250	250	50	170	395
YM-300	300	50	200	525
YM-350	350	55	230	680
YM-400	400	55	250	815

T-600 M3 INSERT NUT ADHESIVE STANDOFF

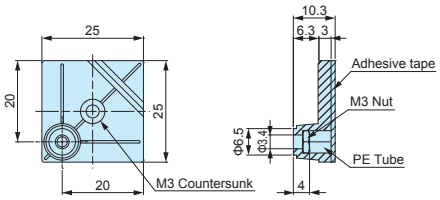

- Double-sided adhesive tape allows the standoff to be mounted easily; allows PCB mounting in non-boss enclosures.

NOTE

- Please ensure the surface is cleaned and grease-free before adhering.
- Once removed, it cannot be adhered on again.
- Recommended screw torque: 4kgf • cm (0.4N • m).

Product no. / Dimensions

Product no.	Material	Color	Weight (g)	Pack of
T-600	ABS	Black	2.6 (g) / pc	10

T-700 M4 INSERT NUT ADHESIVE STANDOFF

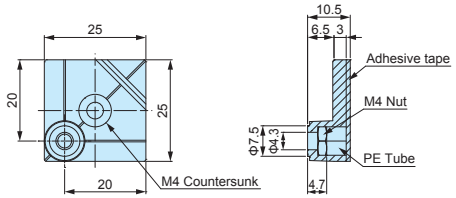

- Double-sided adhesive tape allows the standoff to be mounted easily; allows PCB mounting in non-boss enclosures.

NOTE

- Please ensure the surface is cleaned and grease-free before adhering.
- Once removed, it cannot be adhered on again.
- Recommended screw torque: 8.1kgf • cm (0.81N • m).

Product no. / Dimensions

Product no.	Material	Color	Weight (g)	Pack of
T-700	ABS	Natural	2.6 (g) / pc	10

ASR SERIES ADHESIVE STANDOFF

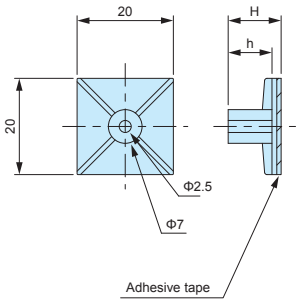

- M3 tapping screw use adhesive standoff.
  Recommended to be used with EM-3 or EM-3-6 tapping screws (See page 115).

NOTE

- Please ensure the surface is cleaned and grease-free before adhering.
- Once removed, it cannot be adhered on again.
- Recommended screw torque: 4kgf • cm (0.4N • m).

Product no. / Dimensions

Product no.	H	h	Weight (g)	Pack of
ASR- 5	5.1	3.1	0.9 (g) / pc	10
ASR- 6	6.4	4.4	1.0 (g) / pc	10
ASR- 7	7.2	5.1	0.9 (g) / pc	10
ASR- 8	8.1	6.3	0.9 (g) / pc	10
ASR- 9	9	7	1.0 (g) / pc	10
ASR-11	11	9	1.0 (g) / pc	10
ASR-13	12.7	10.7	1.2 (g) / pc	10
ASR-14.5	14.7	12.8	1.1 (g) / pc	10
ASR-16	15.9	13.9	1.3 (g) / pc	10
ASR-19	19.1	17.1	1.4 (g) / pc	10

- Material: Nylon 66 UL94V-2

SRDSL SERIES ALUMINIUM DESKTOP CHASSIS

- Designed with an elegant and stylish hairline brushed top cover.
- Champagne gold and silver top covers available.
- Recommended for audio amplifier use.

APPLICATION EXAMPLE

VACUUM TUBE POWER AMPLIFIER

Product by MJ Musen to Jikken (Japan)

DIGITAL MULTI-CHANNEL ANALYZER

Product by Project Integration LLC (Armenia)

Accessories (Optional parts)

Aluminium isolation feet AFS • AFM series

See page AFS • AFM-1 ~ AFS • AFM-2

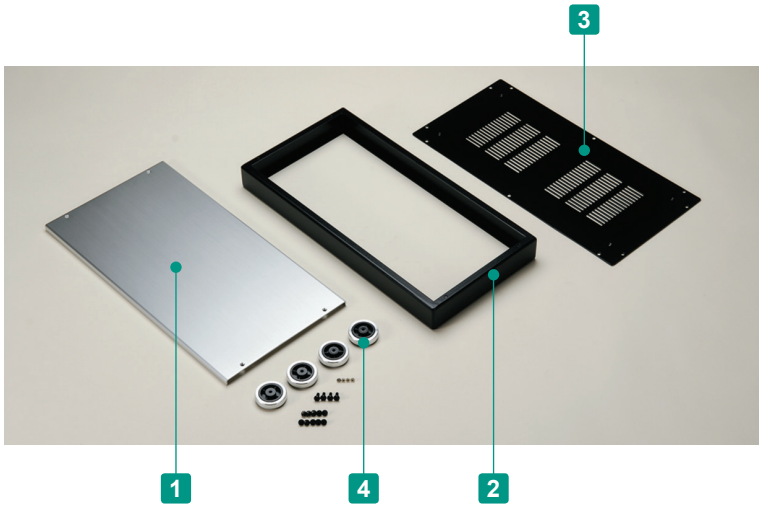

Included screws
M3-5 countersunk • Nickel plated x 4 pcs
M3-5 Binding head with washer • Black trivalent chromate x 14 pcs
M4-10 Binding head • Black trivalent chromate x 4 pcs

Components

No.	Part name	Pcs	Material	Color / Finish
1	Top cover	1	Aluminium A1050P t=2.0	Champagne gold • Silver / Hairline brushed & Anodized
2	Body frame	1	Aluminium A1050P t=2.0	Black / Painted (leather tone)
3	Bottom cover	1	Steel SECC t=1.2	Black / Painted
4	Feet	4	ABS UL94HB : Aluminium	Black : Gold • Black : Silver

SRDSL dimensions

■ Drawings below are reference examples only.
DXF/DWG/PDF drawings available on our website.

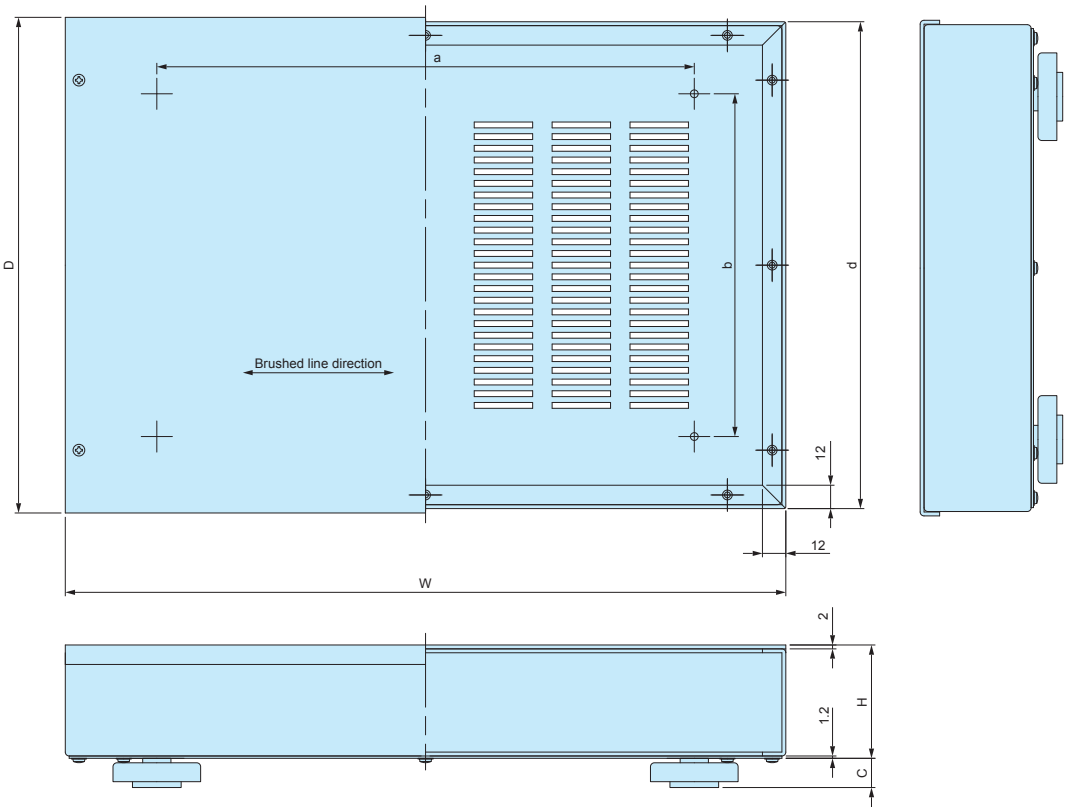

Product no. / Dimensions

Product no.		W	H	D	a	b	c	d	Weight (kg)
Champagne gold	Silver								
SRDSL- 7HG	~~SRDSL- 7HS~~	400	43.2	164.5	336	96	12	160	1.29
SRDSL- 8HG	SRDSL- 8HS	350	58.2	224.5	246	142	12	220	1.56
SRDSL- 9HG	SRDSL- 9HS	400	43.2	204.5	336	136	12	200	1.53
SRDSL-10HG	SRDSL-10HS	370	58.2	254.5	276	176	15	250	1.77
SRDSL-15HG	~~SRDSL-15HS~~	460	63.2	224.5	396	156	15	220	1.91
SRDSL-20HG	SRDSL-20HS	450	68.2	305	336	208	15	300	2.49

※Cross out products are discontinued.

CF SERIES SLOPED ENCLOSURE

- Simple designed box with 10° angle of inclination for operational ease.
- Both the Slide or Screwed panel side can be utilized as a front panel.
- Rubber feet can be attached in any position based on your design requirements.

Low-cost digital printed overlay customization is available with a short lead time.
Refer to page Custom 1 ~ 2 for more details.

Components

No.	Part name	Pcs	Material	Color / Finish
1	Side plate	2	ABS UL94V-0	Black • Gray
2	Front frame	1	Extruded aluminium A6063S-T5	Black • Silver / Anodized
3	Rear frame	1	Extruded aluminium A6063S-T5	Black • Silver / Anodized
4	Slide panel	1	Aluminium A1100P t=1.5	Black / Painted
			Aluminium A1100P t=1.5	Silver / Hairline brushed & Anodized
5	Screwed panel	1	Aluminium A1100P t=1.5	Black / Painted
			Aluminium A1100P t=1.5	Silver / Hairline brushed & Anodized
6	Screw	12	Steel	Black trivalent chromate • Nickel plated
7	Rubber feet	4	Rubber	Black

■ Please peel off the protection sheet cover on both panels before application.

Product no. / Dimensions

Product no.		W	H1	H2	D	Weight (kg)
● Black	◒ Gray/Silver					
CF 7-11BB	CF 7-11GS	70	28.4	48.6	110.5	0.15
CF11-11BB	CF11-11GS	110	28.4	48.6	110.5	0.21
CF16-11BB	CF16-11GS	160	28.4	48.6	110.5	0.29
CF22-11BB	CF22-11GS	220	28.4	48.6	110.5	0.38
CF28-11BB	CF28-11GS	280	28.4	48.6	110.5	0.47
CF12-18BB	CF12-18GS	120	32.4	66.7	180.5	0.38
CF18-18BB	CF18-18GS	180	32.4	66.7	180.5	0.53
CF27-18BB	CF27-18GS	270	32.4	66.7	180.5	0.76
CF35-18BB	CF35-18GS	350	32.4	66.7	180.5	0.97
CF43-18BB	CF43-18GS	430	32.4	66.7	180.5	1.17

Product no.		W	H1	H2	D	Weight (kg)
● Black	◒ Gray/Silver					
CF15-23BB	CF15-23GS	150	39.8	80	230	0.52
CF21-23BB	CF21-23GS	210	39.8	80	230	0.7
CF27-23BB	CF27-23GS	270	39.8	80	230	0.88
CF36-23BB	CF36-23GS	360	39.8	80	230	1.14
CF45-23BB	CF45-23GS	450	39.8	80	230	1.41
CF21-28BB	CF21-28GS	210	50	99	280	0.93
CF28-28BB	CF28-28GS	280	50	99	280	1.17
CF36-28BB	CF36-28GS	360	50	99	280	1.46
CF45-28BB	CF45-28GS	450	50	99	280	1.77

CF dimensions

■ Drawings below are reference examples only.
DXF/DWG/PDF drawings available on our website.

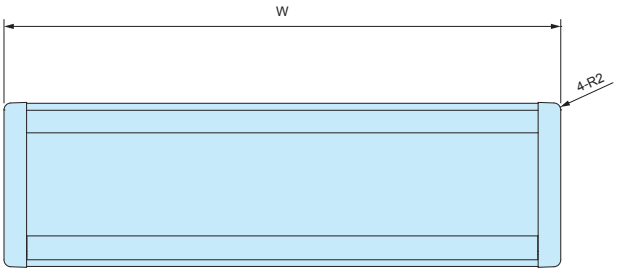

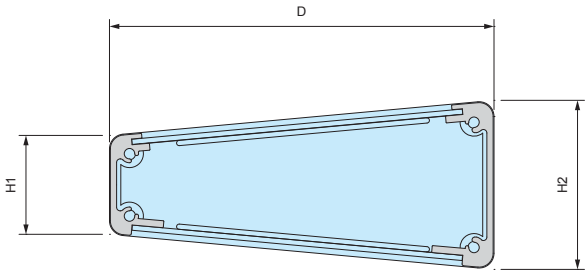

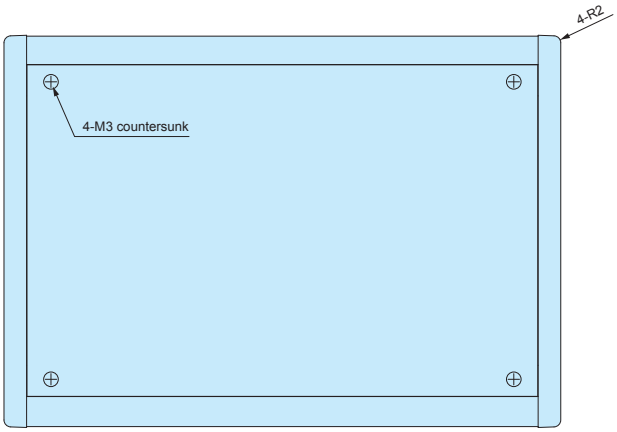

Included screws
CF□-11 models
M3-5 slotted raised countersunk - Black trivalent chromete x 4 pcs
M3-5 slotted raised countersunk - Nickel plated x 4 pcs
M3-10 countersunk - Black trivalent chromete x 8 pcs

CF□-18, CF□-23, and CF□-28 models
M3-5 slotted raised countersunk - Black trivalent chromete x 4 pcs
M3-5 slotted raised countersunk - Nickel plated x 4 pcs
M4-12 countersunk - Black trivalent chromete x 8 pcs

Accessories (Optional parts)

MR SERIES TORX SCREW KIT

■ Material / Finish : Steel / Nickel plated.

■ TORX screw kit for CF series x 1 unit.
■ Recommended for aesthetic purposes, or for tamper-resistance.
■ Requires the use of a specialized screwdriver.

Suitable Enclosures

Product no.	Suitable enslosures
MR-3CS	CF□-11 models
MR-4CS	CF□-18, CF□-23, and CF□-28 models

Product no. / Dimensions

Product no.	Included screws	TORX head no.	Pack of
MR-3CS	M3-10 countersunk x 8 pcs • M3-5 slotted raised countersunk x 4 pcs	T10 (M3)	1 set (for 1 unit)
MR-4CS	M4-12 countersunk x 8 pcs • M3-5 slotted raised countersunk x 4 pcs	T10 (M3) • T20 (M4)	1 set (for 1 unit)

ER SERIES EIA RACK MOUNT ENCLOSURE

Assembly drawings

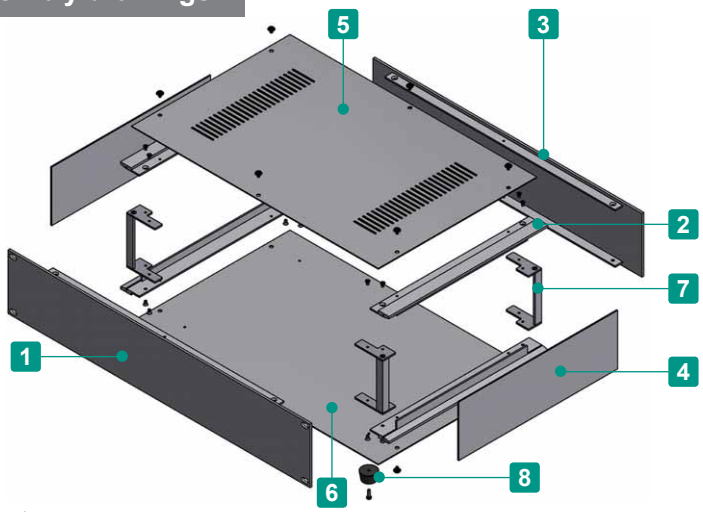

- Available in 35 different size combinations.
- Flat panels allows a wide range of customization to be performed easily, such as milling, inkjet printing, engraving and so on.
- 2 different color types available - Silver and Black.

Components

■ Refer to page AC-1 for AC series mounting plate

No.	Part name	Pcs	Material	Color / Finish
1	Panel	1	Extruded aluminium A6063S-T5	Silver • Black / Hairline brushed & Anodized
2	Frame	4	Extruded aluminium A6063S-T5	Silver • Black / Hairline brushed & Anodized
3	Rear panel	1	Extruded aluminium A6063S-T5	Silver • Black / Hairline brushed & Anodized
4	Side plate	2	Aluminium A1050P t = 1.5	Silver • Black / Hairline brushed & Anodized
5	Top cover	1	Steel SPCC t = 1.0	Black / Painted (leather tone)
6	Bottom cover	1	Steel SPCC t = 1.0	Black / Painted
7	Support bracket	4	Steel SPCC t = 2.0 • Extruded aluminium A6063S-T5	Trivalent chromate • Anodized
8	Rubber feet	4	Synthetic rubber	Black

■ Note: Side plates are covered with a protective film on one side. Remove before assembly.

APPLICATION EXAMPLE

PULSE SIGNAL DISTRIBUTOR

Product by FREQTIME (Japan)

Rear panel

TIME-FREQUENCY REMOTE CALIBRATION DEVICE

Rear panel

ER dimensions

■ DXF/DWG/PDF drawings available on our website.

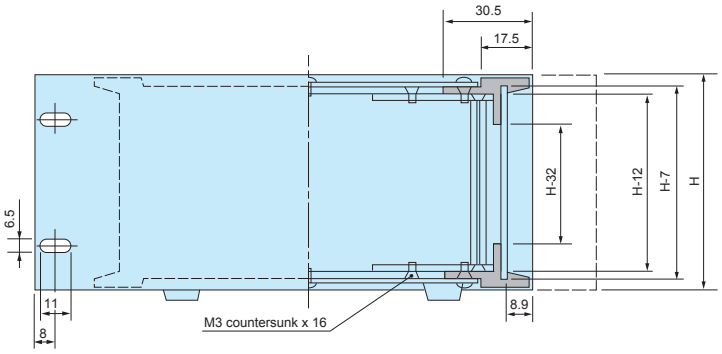

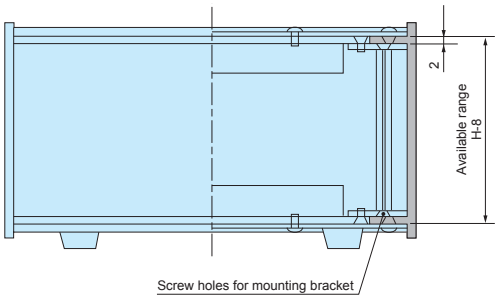

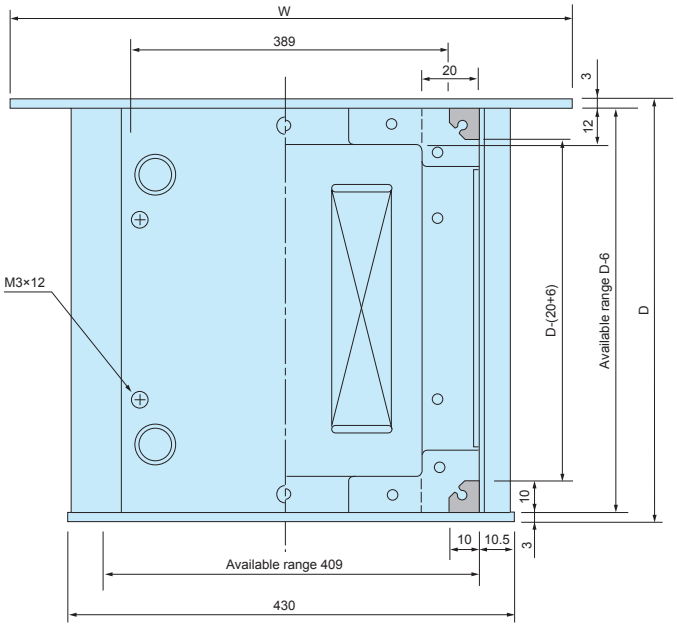

■ Available internal height is H - 29 when assembling AC mounting plate.

Included screws
M3-5 countersunk • Trivalent chromate x 17 pcs
M3-5 Binding head • Black trivalent chromate x 13 pcs
M3-10 Pan head • Trivalent chromate x 4 pcs

Color type

■ Please suffix color code at the end of the product number.

Code	Panel	Rear panel	Frame	Side plate	Top • Bottom cover
S	Silver	Silver	Silver	Silver	Black
B	Black	Black	Black	Black	Black

Product no. / Dimensions

Product no.	W	H	D	Weight (kg)
ER 44-16□	44	482.6	160	1.7
44-20□	44	482.6	200	2.0
44-26□	44	482.6	260	2.5
44-32□	44	482.6	320	2.9
44-37□	44	482.6	370	3.2
44-43□	44	482.6	430	3.7
44-50□	44	482.6	500	4.2
ER 88-16□	88	482.6	160	2.1
88-20□	88	482.6	200	2.5
88-26□	88	482.6	260	2.9
88-32□	88	482.6	320	3.4
88-37□	88	482.6	370	3.7
88-43□	88	482.6	430	4.2
88-50□	88	482.6	500	4.8
ER133-16□	132.5	482.6	160	2.5
133-20□	132.5	482.6	200	2.9
133-26□	132.5	482.6	260	3.3
133-32□	132.5	482.6	320	3.8

Product no.	W	H	D	Weight (kg)
ER133-37□	132.5	482.6	370	4.2
133-43□	132.5	482.6	430	4.7
133-50□	132.5	482.6	500	5.3
ER177-16□	177	482.6	160	2.8
177-20□	177	482.6	200	3.3
177-26□	177	482.6	260	3.8
177-32□	177	482.6	320	4.4
177-37□	177	482.6	370	4.8
177-43□	177	482.6	430	5.3
177-50□	177	482.6	500	5.9
ER222-16□	221.5	482.6	160	3.4
222-20□	221.5	482.6	200	3.8
222-26□	221.5	482.6	260	4.3
222-32□	221.5	482.6	320	4.8
222-37□	221.5	482.6	370	5.3
222-43□	221.5	482.6	430	5.8
222-50□	221.5	482.6	500	6.5

ERH SERIES EIA RACK MOUNT ENCLOSURE with HANDLE

Assembly drawings

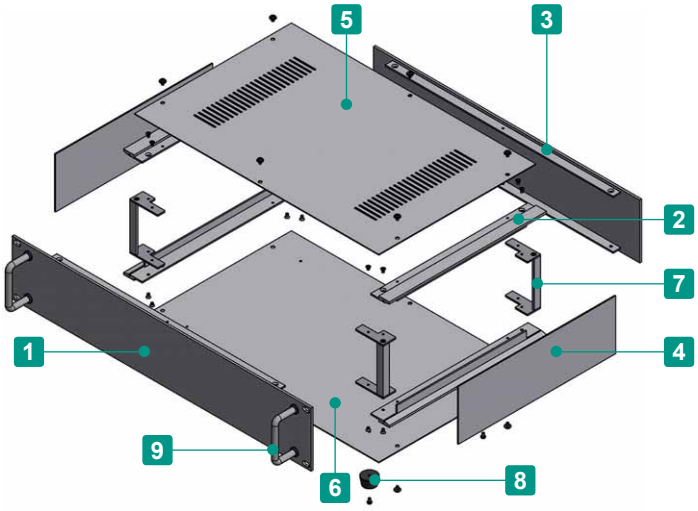

- Available in 35 different size combinations.
- Flat panels allows a wide range of customization to be performed easily, such as milling, inkjet printing, engraving and so on.
- 2 different color types available - Silver and Black.

Components

■ Refer to page AC-1 for AC series mounting plate

No.	Part name	Pcs	Material	Color / Finish
1	Panel	1	Extruded aluminium A6063S-T5	Silver • Black / Hairline brushed & Anodized
2	Frame	4	Extruded aluminium A6063S-T5	Silver • Black / Hairline brushed & Anodized
3	Rear panel	1	Extruded aluminium A6063S-T5	Silver • Black / Hairline brushed & Anodized
4	Side plate	2	Aluminium A1050P t = 1.5	Silver • Black / Hairline brushed & Anodized
5	Top cover	1	Steel SPCC t = 1.0	Black / Painted (leather tone)
6	Bottom cover	1	Steel SPCC t = 1.0	Black / Painted
7	Support bracket	4	Steel SPCC t = 2.0 • Extruded aluminium A6063S-T5	Trivalent chromate • Anodized
8	Rubber feet	4	Synthetic rubber	Black
9	Handle	2	Aluminium A5056S • Brass	Silver • Black / Anodized • Chrome plated

■ Note: Side plates are covered with a protective film on one side. Remove before assembly.

APPLICATION EXAMPLE

FM TRANSMITTER Product by Rough and Ready.Co.,Ltd. (Japan)

ERH dimensions

■ DXF/DWG/PDF drawings available on our website.

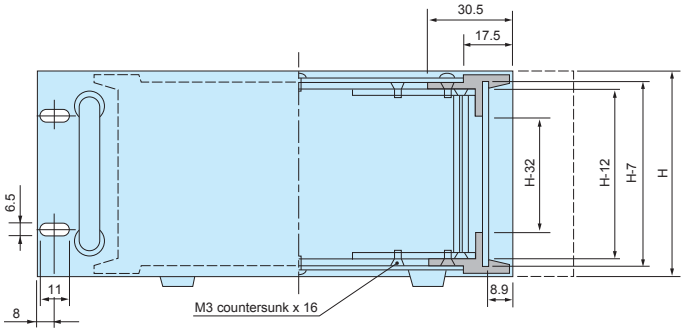

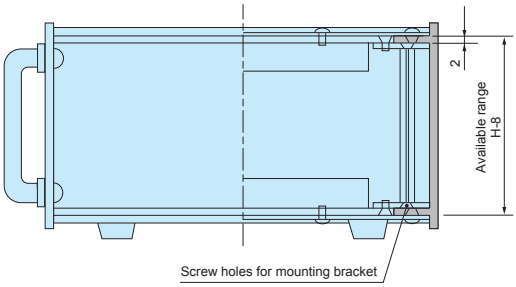

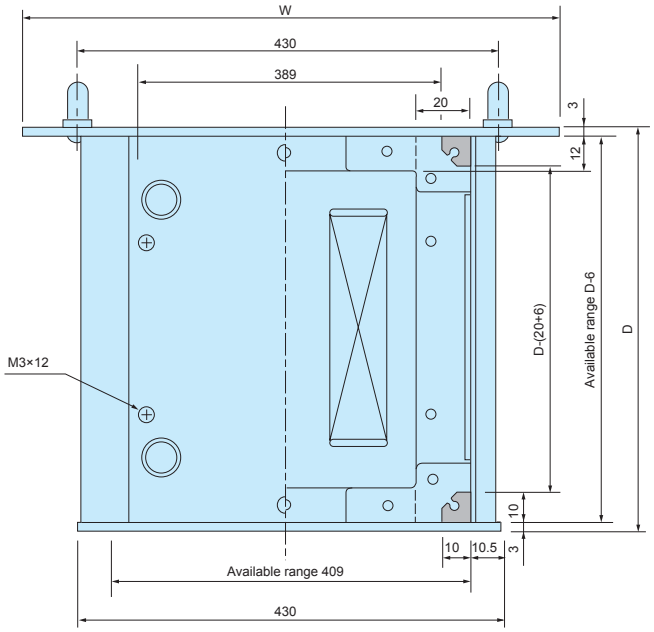

■ Available internal height is H - 29 when assembling AC mounting plate.

Included screws
M3-5 countersunk • Trivalent chromate x 17 pcs
M3-5 Binding head • Black trivalent chromate x 13 pcs
M3-10 Pan head • Trivalent chromate x 4 pcs

Color type

■ Please suffix color code at the end of the product number.

Code	Panel	Rear panel	Frame	Side plate	Top • Bottom cover
S	Silver	Silver	Silver	Silver	Black
B	Black	Black	Black	Black	Black

Product no. / Dimensions

Product no.	W	H	D	Weight (kg)
ERH 44-16□	44	482.6	160	1.7
44-20□	44	482.6	200	2.0
44-26□	44	482.6	260	2.5
44-32□	44	482.6	320	2.9
44-37□	44	482.6	370	3.2
44-43□	44	482.6	430	3.7
44-50□	44	482.6	500	4.2
ERH 88-16□	88	482.6	160	2.2
88-20□	88	482.6	200	2.5
88-26□	88	482.6	260	3.0
88-32□	88	482.6	320	3.4
88-37□	88	482.6	370	3.8
88-43□	88	482.6	430	4.2
88-50□	88	482.6	500	4.8
ERH133-16□	132.5	482.6	160	2.5
133-20□	132.5	482.6	200	2.9
133-26□	132.5	482.6	260	3.4
133-32□	132.5	482.6	320	3.9

Product no.	W	H	D	Weight (kg)
ERH133-37□	132.5	482.6	370	4.2
133-43□	132.5	482.6	430	4.7
133-50□	132.5	482.6	500	5.4
ERH177-16□	177	482.6	160	2.9
177-20□	177	482.6	200	3.4
177-26□	177	482.6	260	3.9
177-32□	177	482.6	320	4.4
177-37□	177	482.6	370	4.8
177-43□	177	482.6	430	5.4
177-50□	177	482.6	500	6.0
ERH222-16□	221.5	482.6	160	3.5
222-20□	221.5	482.6	200	3.9
222-26□	221.5	482.6	260	4.4
222-32□	221.5	482.6	320	4.9
222-37□	221.5	482.6	370	5.4
222-43□	221.5	482.6	430	5.9
222-50□	221.5	482.6	500	6.5

AC SERIES MOUNTING PLATE for ER • ERH

■ DXF/DWG/PDF drawings available on our website.

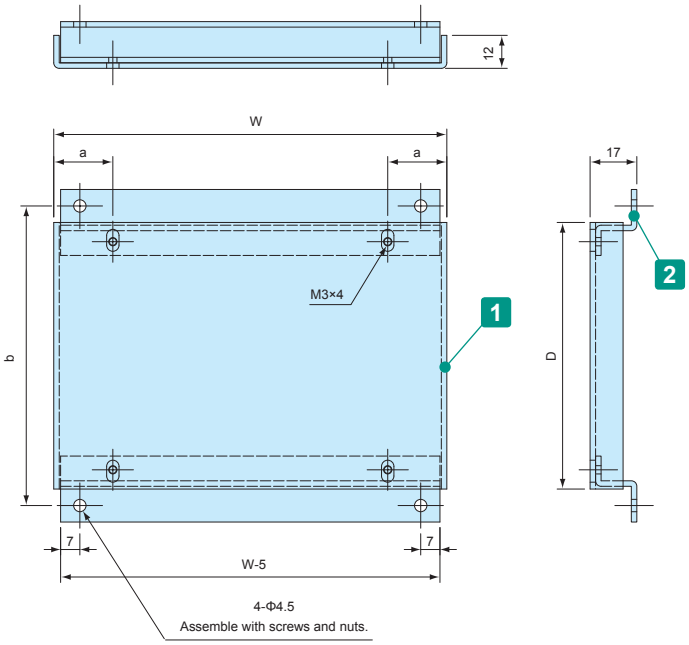

Assembly drawings

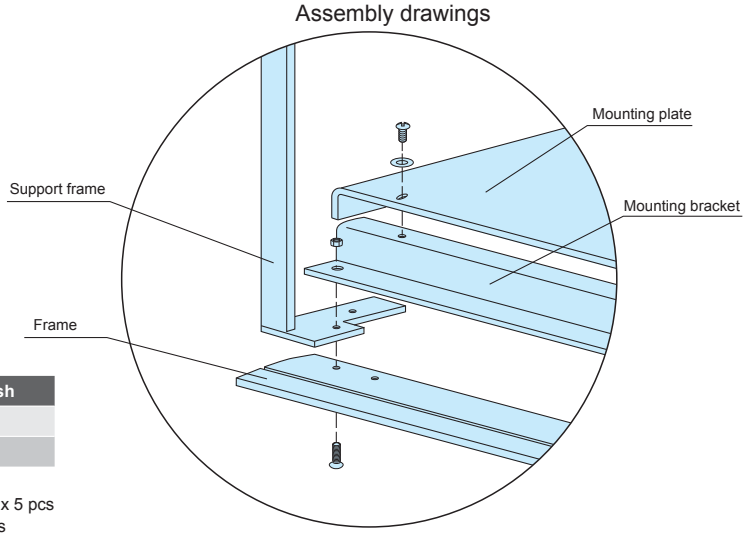

Components

No.	Part name	Pcs	Material	Color / Finish
1	Mounting plate	1	Aluminium A1050P t=2.0	Unfinished
2	Mounting bracket	2	Aluminium A1050P t=2.0	Unfinished

Included screws
M3-10 countersunk • Trivalent Chromate x 5 pcs
M3-6 Binding head • Nickel plated x 5 pcs
M3 washer • Nickel plated x 5 pcs
M3 nut • Trivalent Chromate x 5 pcs

Product no. / Dimensions

Product no.	W	D	a	b	Suitable enclosure	Weight (g)
AC16-43	143	367	21.5	379	ER□□-16 / ERH□□-16	370
AC20-43	183	367	24.5	379	ER□□-20 / ERH□□-20	460
AC26-43	243	367	31.5	379	ER□□-26 / ERH□□-26	610
AC32-43	303	367	39.5	379	ER□□-32 / ERH□□-32	740
AC37-43	353	367	46.5	379	ER□□-37 / ERH□□-37	860
AC43-43	413	367	54.5	379	ER□□-43 / ERH□□-43	990
AC50-43	483	367	64.5	379	ER□□-50 / ERH□□-50	1,160

AP SERIES EIA ALUMINIUM RACK PANEL

■ Standard aluminium panel for 19 inch rack.

■ Drawings below are reference examples only.
DXF/DWG/PDF drawings available on our website.

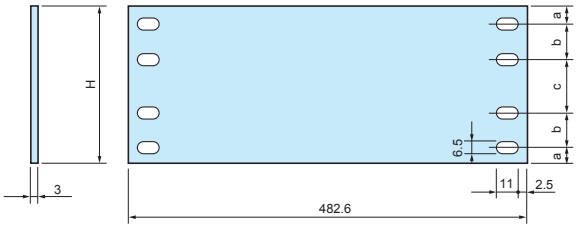

Product no. / Dimensions

Product no.		H	a	b	c	Mounting hole (One side)	Material	Surface finish	Weight (kg)
● Silver	● Black								
AP- 44S	AP- 44B	44	6.1	–	31.8	2	Extruded aluminium A6063S-T5	Hairline brushed & Anodized	0.18
AP- 88S	AP- 88B	88	5.9	–	76.2	2	Extruded aluminium A6063S-T5	Hairline brushed & Anodized	0.33
AP-133S	AP-133B	132.5	37.7	–	57.1	2	Extruded aluminium A6063S-T5	Hairline brushed & Anodized	0.48
AP-177S	AP-177B	177	37.7	–	101.6	2	Extruded aluminium A6063S-T5	Hairline brushed & Anodized	0.7
AP-222S	AP-222B	221.5	37.75	–	146	2	Aluminium A1050P	Hairline brushed & Anodized	0.87
AP-266S	AP-266B	265.9	37.7	57.2	76.1	4	Aluminium A1050P	Hairline brushed & Anodized	1.06
AP-311S	AP-311B	310.4	37.7	88.9	57.2	4	Aluminium A1050P	Hairline brushed & Anodized	1.24
AP-355S	AP-355B	354.8	37.7	101.6	76.2	4	Aluminium A1050P	Hairline brushed & Anodized	1.42

EP SERIES EIA EXTRUDED ALUMINIUM RACK PANEL

■ Extruded aluminium panel with reinforced rib for 19 inch rack.

■ Drawings below are reference examples only.
DXF/DWG/PDF drawings available on our website.

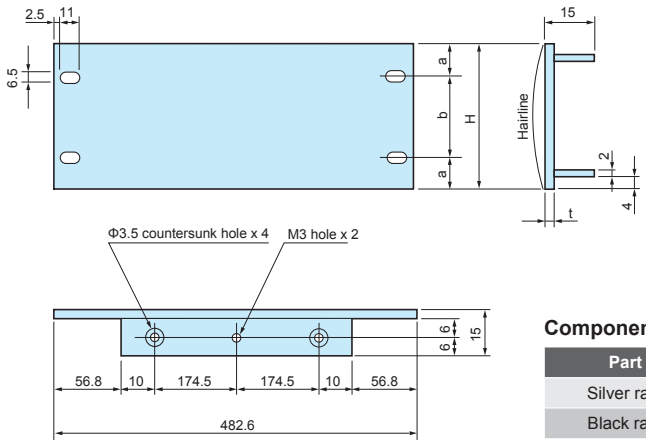

Components

Part name	Material	Surface finish
Silver rack panel	Extruded aluminium A6063S-T5	Hairline brushed & Anodized
Black rack panel	Extruded aluminium A6063S-T5	Hairline brushed & Anodized

Product no. / Dimensions

Product no.		H	a	b	t	Mounting hole (One side)	Weight (kg)
● Silver	● Black						
EP-3- 44S	EP-3- 44B	44	6.1	31.8	3.0	2	0.21
EP-3- 88S	EP-3- 88B	88	5.9	76.2	3.0	2	0.38
EP-3-133S	EP-3-133B	132.5	37.7	57.1	3.0	2	0.54
EP-3-177S	EP-3-177B	177	37.7	101.6	3.0	2	0.72
EP-3-222S	EP-3-222B	221.5	37.75	146	3.0	2	0.93

CUSTOMIZATION ON RACK PANEL

- CNC machining service is available from just 1 pc with a short lead time.
- Low-cost digital inkjet printing service is available for your customized front panel.
- Visit our website for more details.

- Anodizing and painting services are also available.

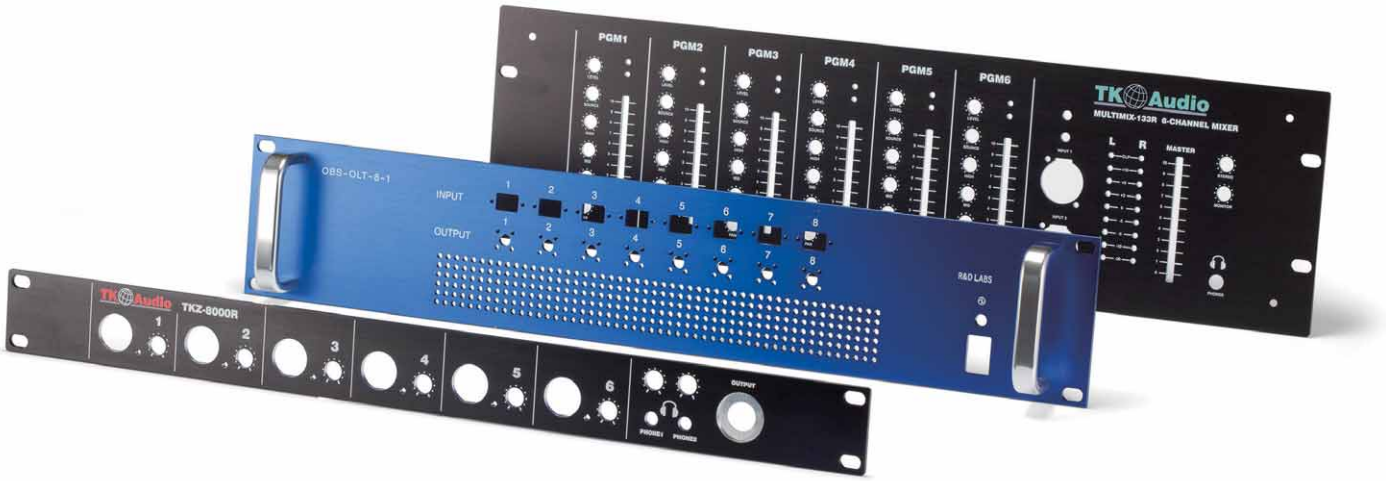

TD series DIECAST ALUMINIUM BOX

Conductive

- Tough diecast aluminium box.
- Available in 12 sizes and 2 color types.
- Black painted and unfinished boxes are available.
- Recommended for electric guitar effect pedals.
- Conductivity can be achieved by utilization of the contact between the unfinished inner surfaces (only applicable to "N" type).

Components

No.	Part name	Pcs	Material	Color / Finish
1	Cover	1	Diecast aluminium ADC12	Black / Painted • Natural / Unfinished
2	Base	1	Diecast aluminium ADC12	Black / Painted • Natural / Unfinished
3	Screw	4	Steel M3.5 flat head	Black trivalent chromate • Nickel plated

TD dimensions

■ DXF/DWG/PDF drawings available on our website.

TD 4- 6-3
4- 9-3
5- 8-3
6-11-3
7-10-3
9-12-4
10-13-4
10-15-4
12-18-5

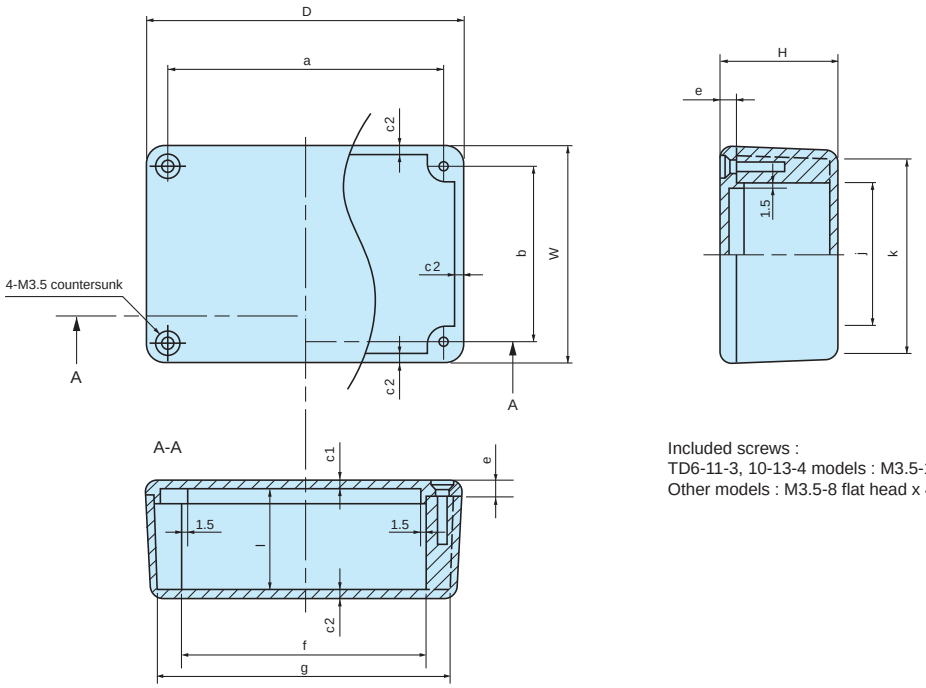

Included screws :
TD6-11-3, 10-13-4 models : M3.5-10 flat head x 4 pcs
Other models : M3.5-8 flat head x 4 pcs

TD 6- 6-4
8- 8-4
11-11-5

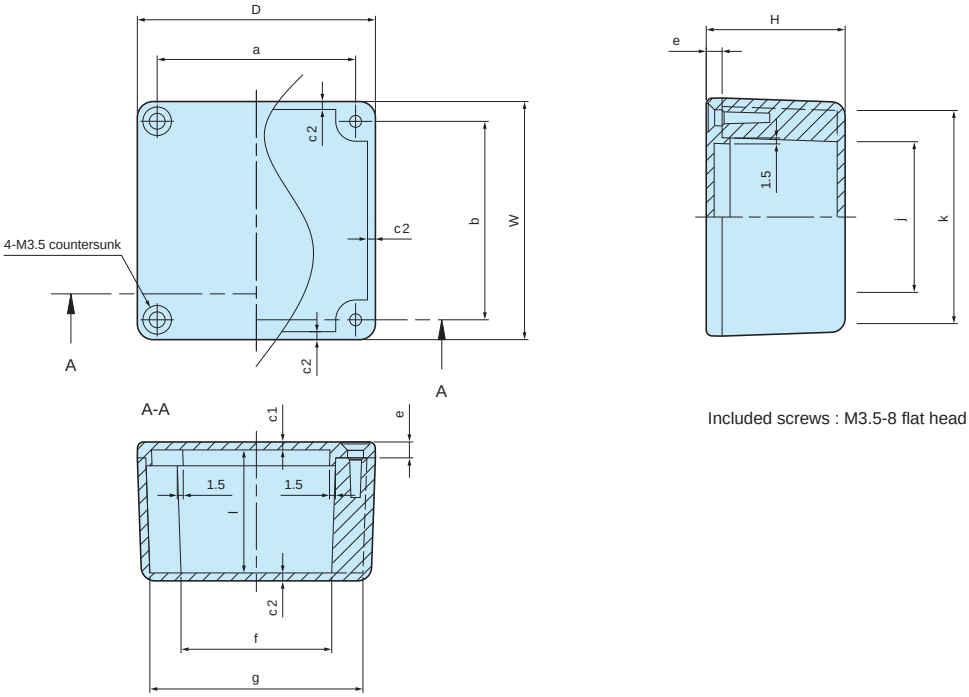

Included screws : M3.5-8 flat head x 4 pcs

Product no. / Dimensions

Product no.		W	H	D	a	b	c1	c2	e	f	g	j	k	l	Weight (g)
● Black	○ Natural Conductive														
TD 4- 6-3B	TD 4- 6-3N	40	27	60	50	30	2	2	4	39.5	53.5	20	33.5	23	56
TD 4- 9-3B	TD 4- 9-3N	40.5	32	94.5	84.5	30.5	2.25	2.25	4	74.5	87	20.5	33	27.5	97
TD 5- 8-3B	TD 5- 8-3N	55	30.5	80	70	45	2	2	4.5	58.5	72.5	33.5	47.5	26	95
TD 6- 6-4B	TD 6- 6-4N	60	35	60	50	50	2	2	4	37	51	37	51	31	90
TD 6-11-3B	TD 6-11-3N	64.5	31.8	115.5	105	54	2.25	2.25	4.25	92.5	106.5	42	55.5	27	164.5
TD 7-10-3B	TD 7-10-3N	70	32.5	100	90	60	2.5	2	4.5	78	92	48	62	28	135
TD 8- 8-4B	TD 8- 8-4N	80	40	80	70	70	2	2	4	56.5	70.5	56.5	70.5	36	145
TD 9-12-4B	TD 9-12-4N	85	35	120	110	75	2	2	4	98.5	112	63.5	77	31	185
TD10-13-4B	TD10-13-4N	95.5	37.8	130.5	120	85	2.25	2.25	4.25	107.5	121	72.5	86	33	263
TD10-15-4B	TD10-15-4N	100	40	150	140	90	2.5	2.5	4	128.5	142	78	92	35	320
TD11-11-5B	TD11-11-5N	110	45	110	100	100	2.5	2.5	4	86	99	86	99	41	280
TD12-18-5B	TD12-18-5N	120	50	180	170	110	2.5	2.5	4	156	171	97.5	110	45	455

BDN series IP67 DIECAST ALUMINIUM BOX

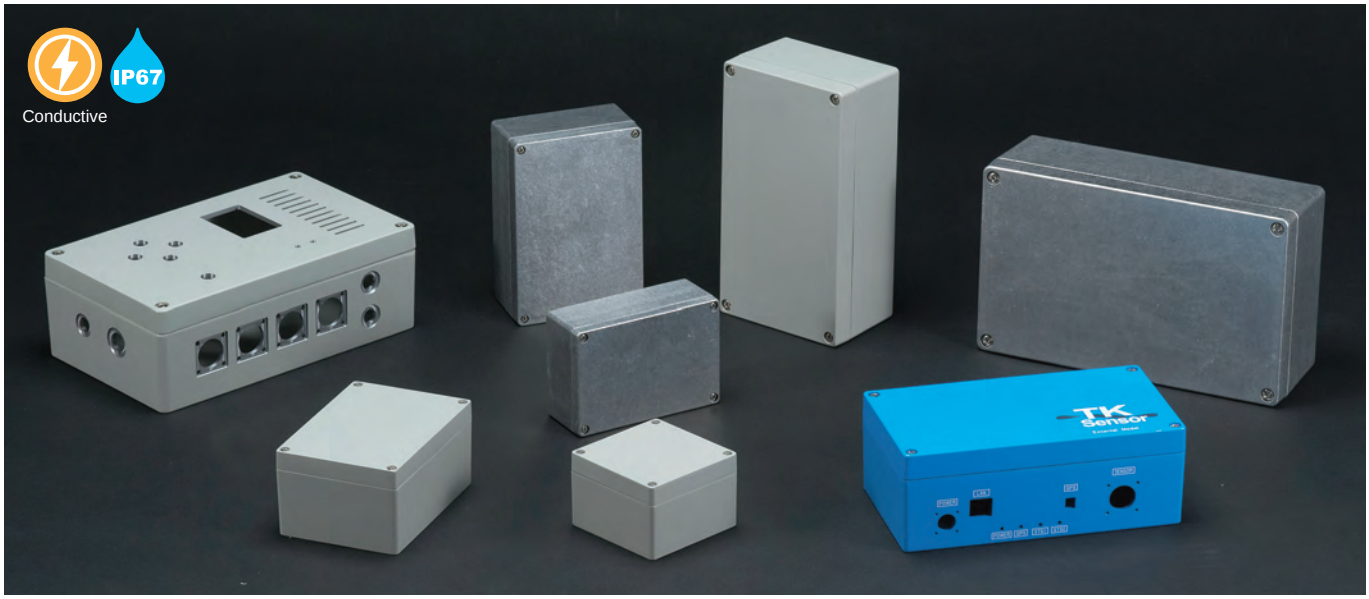

Technical Data

Protection class: IP67
Operating temperature: -40°C ~ +105°C
Recommended torque: 1.0N • m (10kgf • cm)

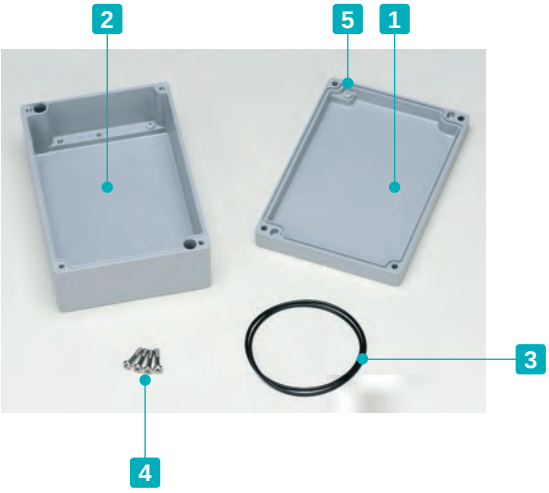

- 8 different sizes available for both light gray powder coated and unfinished models.
- O-ring gasket is good for maintaining both waterproof and dustproof functionality.
- Shock resistant diecast aluminium box.
- Conductivity can be achieved by utilization of the contact between the unfinished inner surfaces (only applicable to "N" type).

Components

No.	Part name	Pcs	Material	Color / Finish
1	Top cover	1	Diecast aluminium ADC12	Light gray / Powder coated • Natural / Unfinished
2	Base	1	Diecast aluminium ADC12	Light gray / Powder coated • Natural / Unfinished
3	O-ring gasket	1	Silicone	Black
4	Screw	4	Stainless steel	Unfinished
5	Earthing screw	2	Steel M4-5 pan head	Nickel plated

Accessories (Optional parts)

Wall mounting bracket CK series
See website

Mounting plate FTB series
See website

Pole mounting bracket SSK series
See website

DIN-Rail FDR series
See website

Cable gland
See page 333 ~ 340

BDN dimensions

■ DXF/DWG/PDF drawings available on our website.

BDN 6-8-5

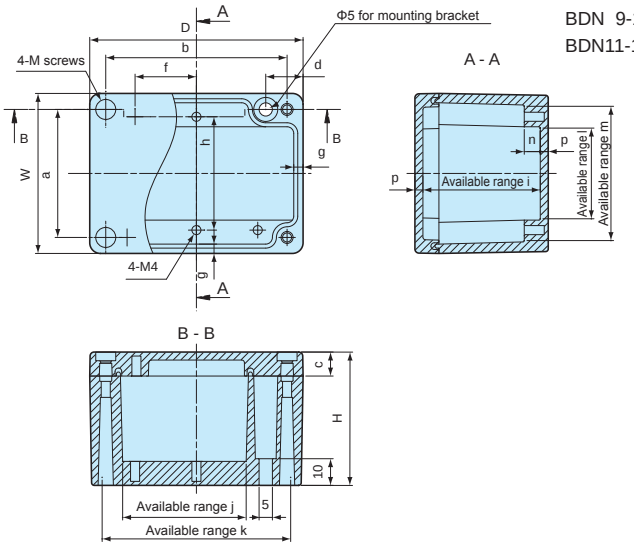

BDN 7-10-4
BDN 9-13-5
BDN11-16-6

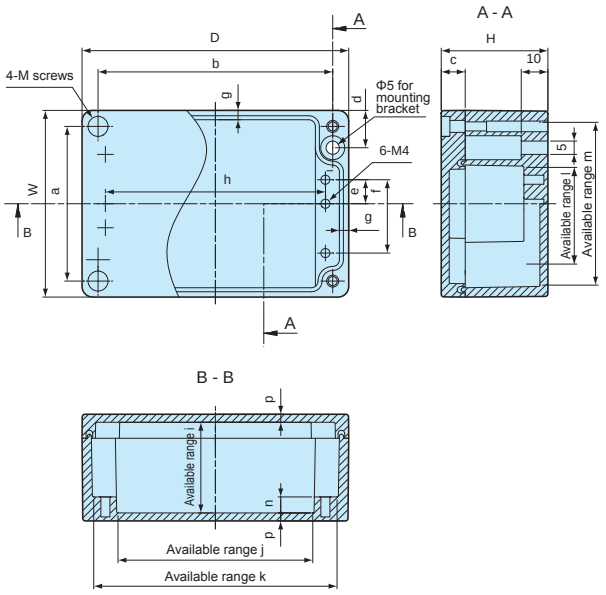

BDN 9- 9-6
BDN10-14-7
BDN12-22-8
BDN16-26-9

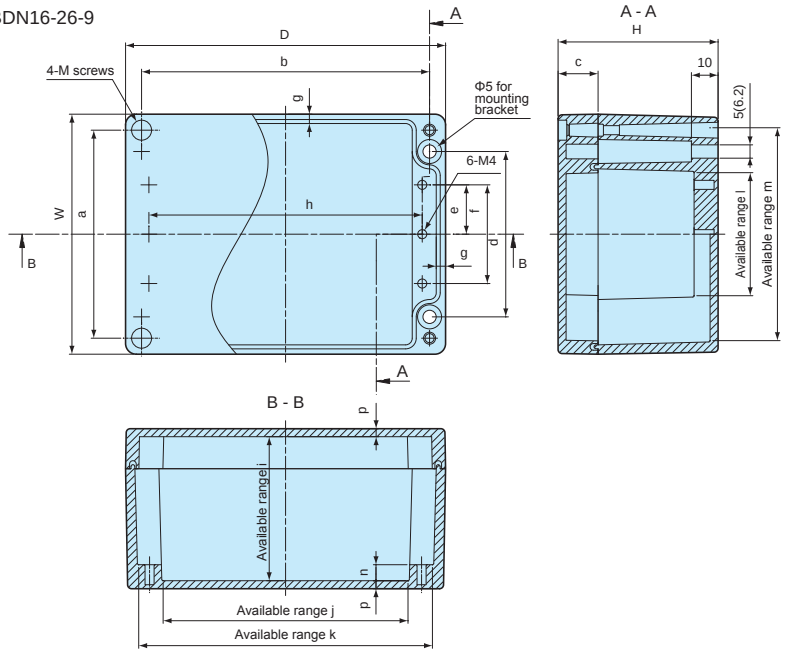

※Dimension in ( ) = BDN12-22-8
BDN16-26-9

Product no. / Dimensions

Product no.		Dimensions						Weight (g)
● Light gray	○ Natural Conductive	W	D	H	a	b	c	
BDN 6- 8-5G	BDN 6- 8-5N	60	80	50	48	68	9	240
BDN 7-10-4G	BDN 7-10-4N	70	100	40	58	88	9	250
BDN 9- 9-6G	BDN 9- 9-6N	90	90	60	78	78	15	395
BDN 9-13-5G	BDN 9-13-5N	90	130	50	78	118	9	420
BDN10-14-7G	BDN10-14-7N	100	140	70	88	128	15	635
BDN11-16-6G	BDN11-16-6N	110	160	60	98	148	15	640
BDN12-22-8G	BDN12-22-8N	120	220	80	105	205	20	1,155
BDN16-26-9G	BDN16-26-9N	160	260	90	140	240	20	2,145

Product no.		Dimensions												
● Light gray	○ Natural Conductive	d	e	f	g	h	i	j	k	ℓ	m	n	p	M
BDN 6- 8-5G	BDN 6- 8-5N	14	–	23	3.5	42.5	44	45	71	33	51	6	3	M4
BDN 7-10-4G	BDN 7-10-4N	14	11	31	3	85	34	75	92.5	38	62.5	6	3	M4
BDN 9- 9-6G	BDN 9- 9-6N	62	18.5	37	3.5	72	54	62	80	45	80	6	3	M4
BDN 9-13-5G	BDN 9-13-5N	14	19	47.5	3.5	112.5	44	104	121	56	81	6	3	M4
BDN10-14-7G	BDN10-14-7N	72	24	48	3.5	121	64	111	130	56	90	6	3	M4
BDN11-16-6G	BDN11-16-6N	14	29	67.5	3.5	142.5	54	134	151	76	101	6	3	M4
BDN12-22-8G	BDN12-22-8N	84.6	28	56	3.9	196	74	183	206	62	105	6	3	M5
BDN16-26-9G	BDN16-26-9N	110	36	72	4.8	230	82	216	247	87	146	9	4	M6

FTB SERIES

MOUNTING PLATE for BDN

FTB 5-7

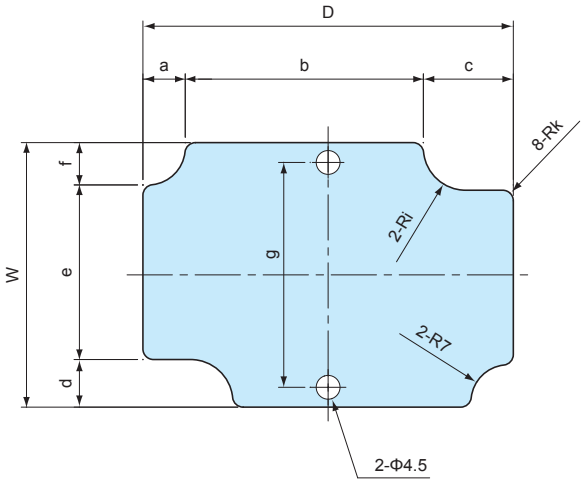

FTB 6-9

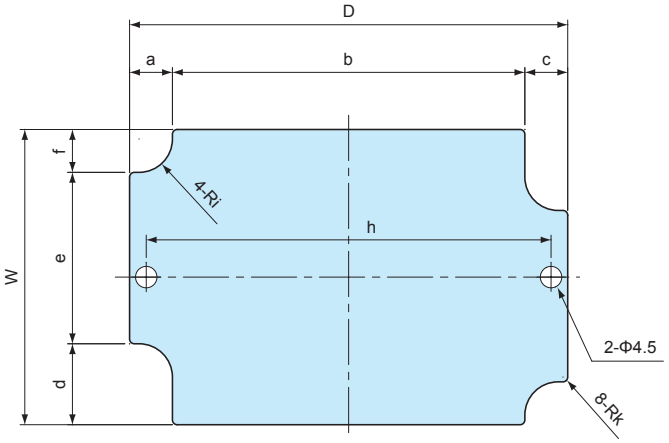

FTB 8-12
FTB10-15

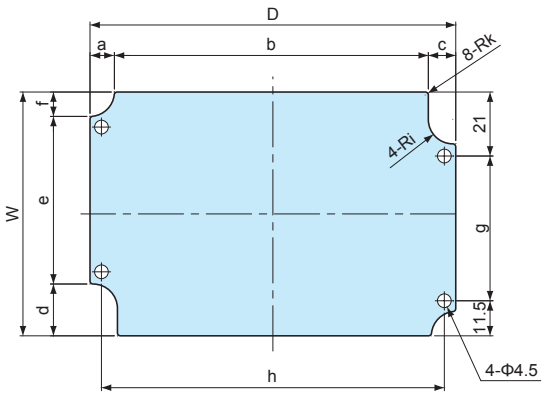

FTB 8- 8 FTB10-20
FTB 9-13 FTB14-24

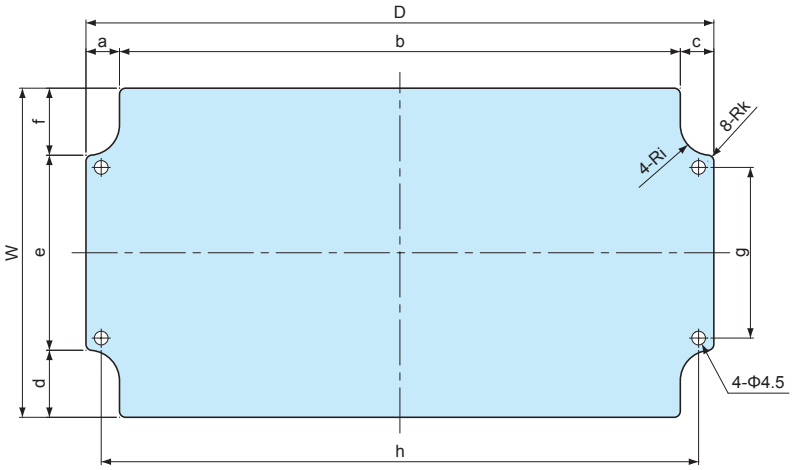

Material	Color / Finish
Aluminium A1050P t = 1.5	Silver / Anodized

Product no. / Dimensions

Product no.	Suiteble box	W	D	a	b	c	d	e	f	g	h	i	k
FTB 5- 7	BDN 6- 8-5	50	70	8	45	17	9	33	8	42.5	–	8	2
FTB 6- 9	BDN 7-10-4	62	92	9	74	9	17	36	9	–	85	7	1
FTB 8- 8	BDN 9- 9-6	80	80	9	62	9	17	46	17	37	72.5	8	2
FTB 8-12	BDN 9-13-5	80	120	8	103	9	17	55	8	47.5	112.5	8	1
FTB 9-13	BDN10-14-7	89	129	9	111	9	17	55	17	48	121	8.5	2
FTB10-15	BDN11-16-6	100	150	8	133	9	17	75	8	67.5	142.5	8	1
FTB10-20	BDN12-22-8	108	206	11	184	11	22	64	22	56	196	10	2
FTB14-24	BDN16-26-9	144	244	15	214	15	30	84	30	72	230	12	3

HQ SERIES IP67 EMC SHIELDED DIECAST ALUMINIUM BOX

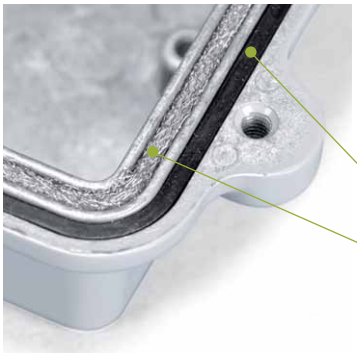

Technical Data
Protection class : IP67 Operating temperature : -40°C ~ +105°C Recommended torque : 1N • m

- A double gasket construction allows both IP67 protection and EMC shielding to be possible.
- 13 different sizes available with 2 different finish types.
- Suitable for CATV terminal, fiber optic transmitter, FA controller, and so on.
- Available in powder coated model and unfinished model.

APPLICATION EXAMPLE

CATV OPTICAL NODE

LPWA OUTDOOR GATEWAY

WIFI ACCESS POINT

Accessories (Optional parts)

Mounting bracket HQF series
See page HQ-7

Pole Mounting bracket SSK series
See page SSK-M-1 ~ SSK-M-3

Mounting plate HQP series
See page HQ-8

Mountng screw MT series
See page HQ-7

Cable gland
See cable gland pages

Protective vent PMF series
See PMF pages

Product no. / Dimensions

Product no.		Dimensions			Weight (g)
● Light gray	○ Unfinished	W	D	H	
HQ10-10- 5G	HQ10-10- 5N	96.3	96.8	45	302
HQ10-10- 7G	HQ10-10- 7N	96.8	96.8	67	335
HQ15-10- 5G	HQ15-10- 5N	150	100	50	442
HQ15-10- 8G	HQ15-10- 8N	150	99.5	75	494
HQ16-16- 6G	HQ16-16- 6N	162	162	55	626
HQ16-16- 8G	HQ16-16- 8N	162	162	80	715
HQ19-10- 5G	HQ19-10- 5N	192	96	45	507
HQ19-10- 7G	HQ19-10- 7N	192	96	67	590
HQ20-15- 5G	HQ20-15- 5N	200	150	50	753
HQ20-15- 8G	HQ20-15- 8N	200	150	75	849
HQ26-18- 6G	HQ26-18- 6N	262	181.5	55	961
HQ27-17- 7G	HQ27-17- 7N	274.2	173.2	66	1,129
HQ27-17-10G	HQ27-17-10N	274.2	172.7	100	1,287

HQ dimensions

HQ10-10-5
HQ10-10-7

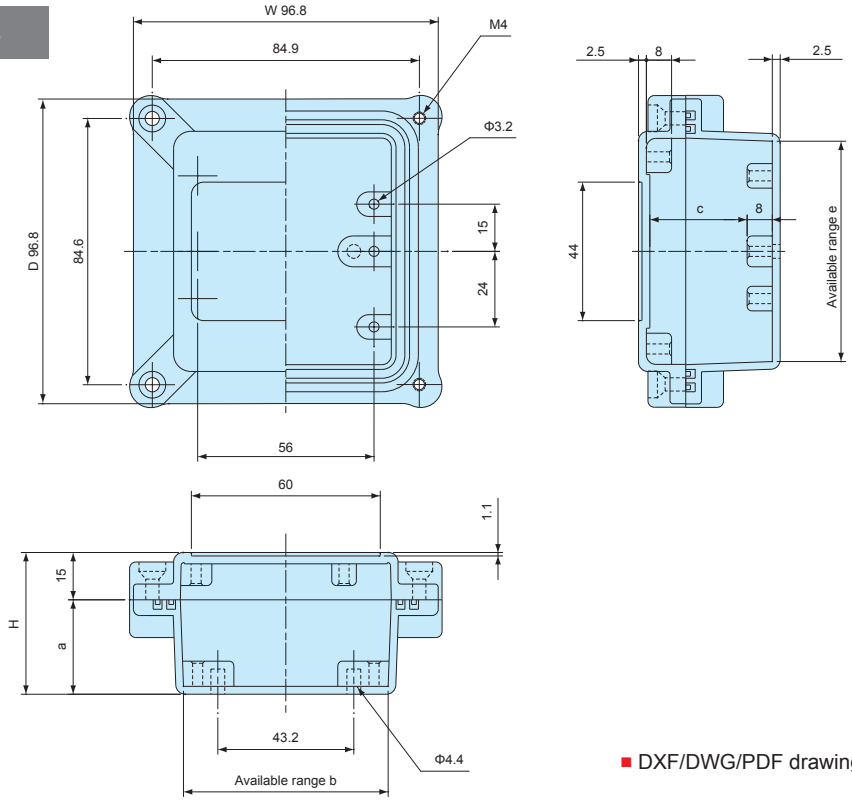

■ DXF/DWG/PDF drawings available on our website.

Product no.	W	D	H	a	b	c	e
HQ10-10- 5	96.3	96.8	45	30	64	30.9	69
HQ10-10- 7	96.8	96.8	67	52	64	52.9	69

HQ dimensions

■ DXF/DWG/PDF drawings available on our website.

HQ15-10-5
HQ15-10-8

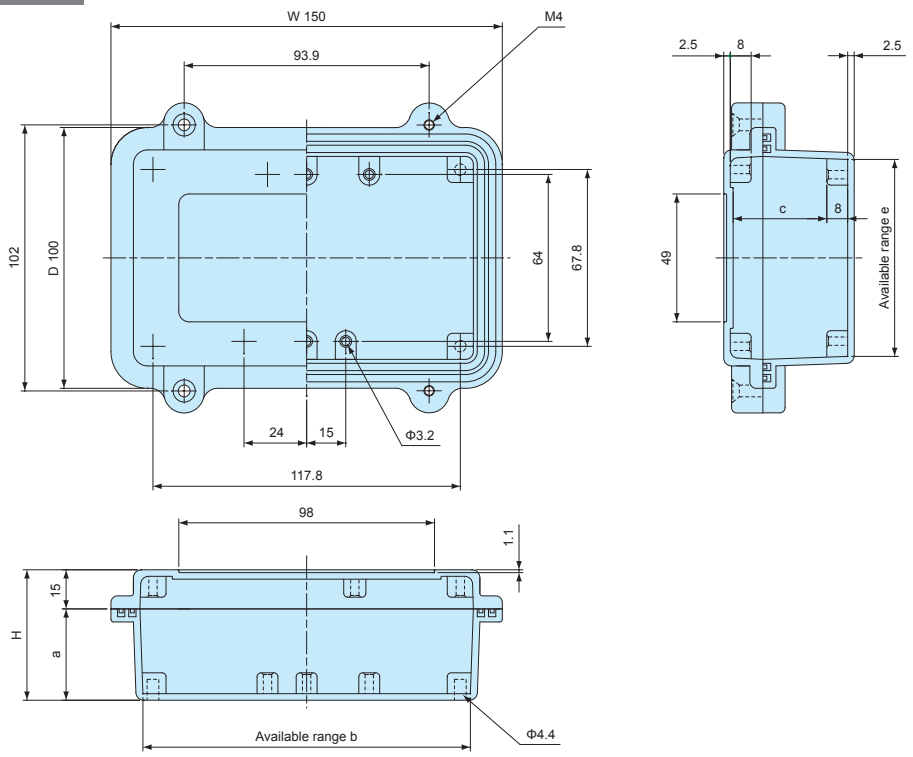

Product no.	W	D	H	a	b	c	e
HQ15-10- 5	150	100	50	35	125.5	35.9	75.5
HQ15-10- 8	150	99.5	75	60	123.7	60.9	73.7

HQ16-16-6
HQ16-16-8

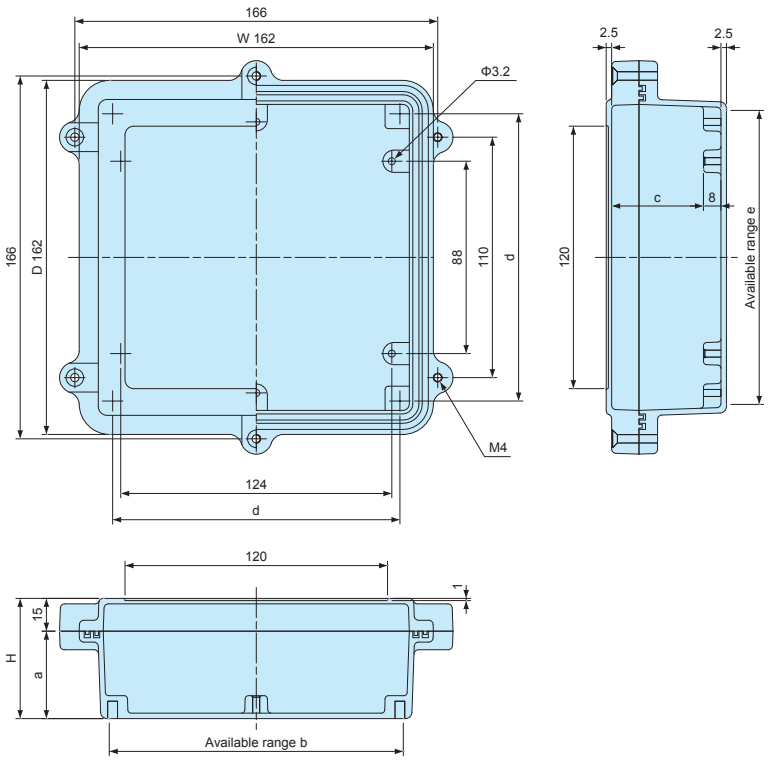

Product no.	W	D	H	a	b	c	d	e
HQ16-16- 6	162	162	55	40	134.5	42	131.41	134.5
HQ16-16- 8	162	162	80	65	132.7	67	129.66	132.7

HQ dimensions

■ DXF/DWG/PDF drawings available on our website.

HQ19-10-5
HQ19-10-7

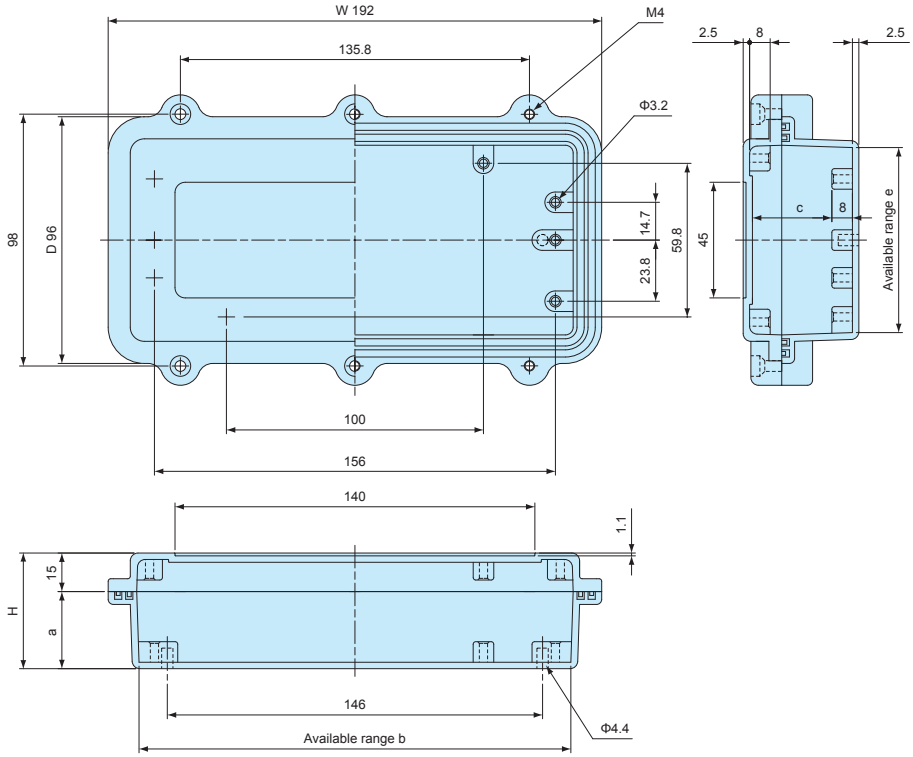

Product no.	W	D	H	a	b	c	e
HQ19-10- 5	192	96	45	30	168	30.9	72
HQ19-10- 7	192	96	67	52	166.6	52.9	70.6

HQ20-15-5
HQ20-15-8

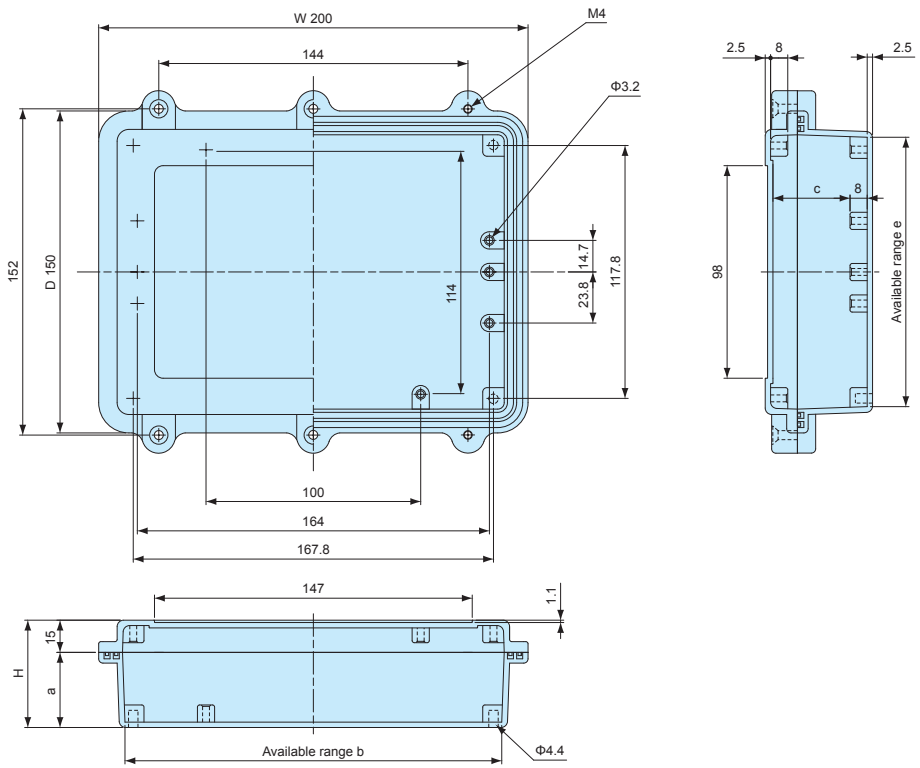

Product no.	W	D	H	a	b	c	e
HQ20-15- 5	200	150	50	35	175.5	35.9	125.5
HQ20-15- 8	200	150	75	60	173.7	60.9	123.7

HQ dimensions

■ DXF/DWG/PDF drawings available on our website.

HQ26-18-6

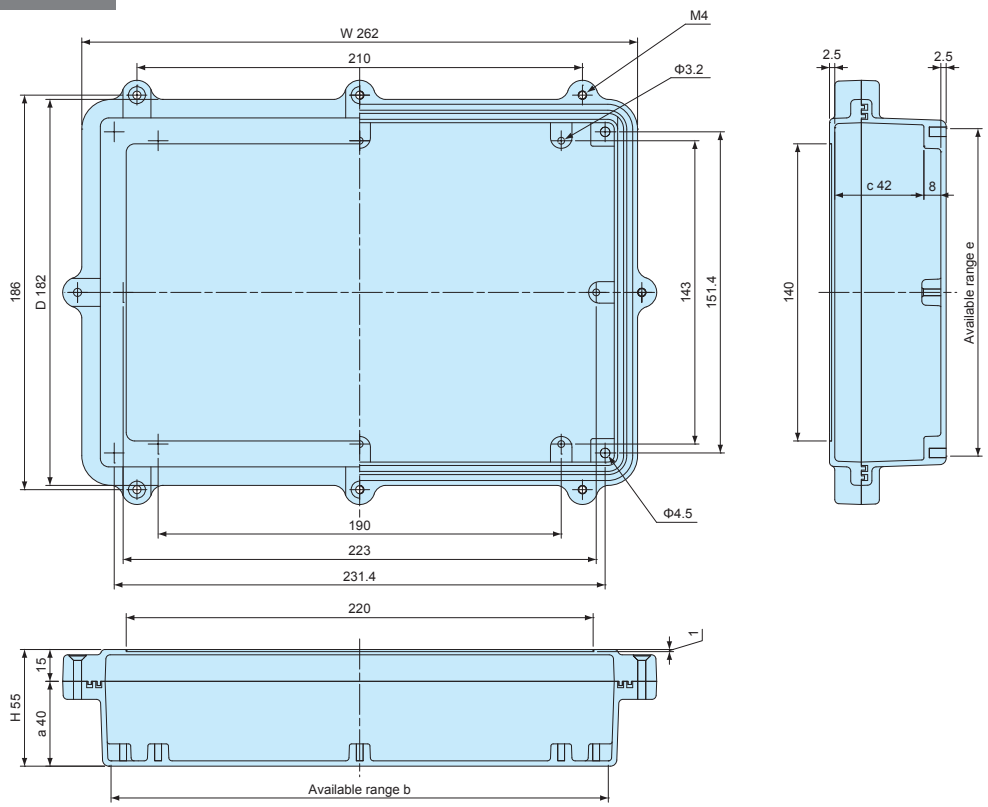

Product no.	W	D	H	a	b	c	e
HQ26-18- 6	262	181.5	55	40	234.4	42	154.4

HQ27-17- 7
HQ27-17-10

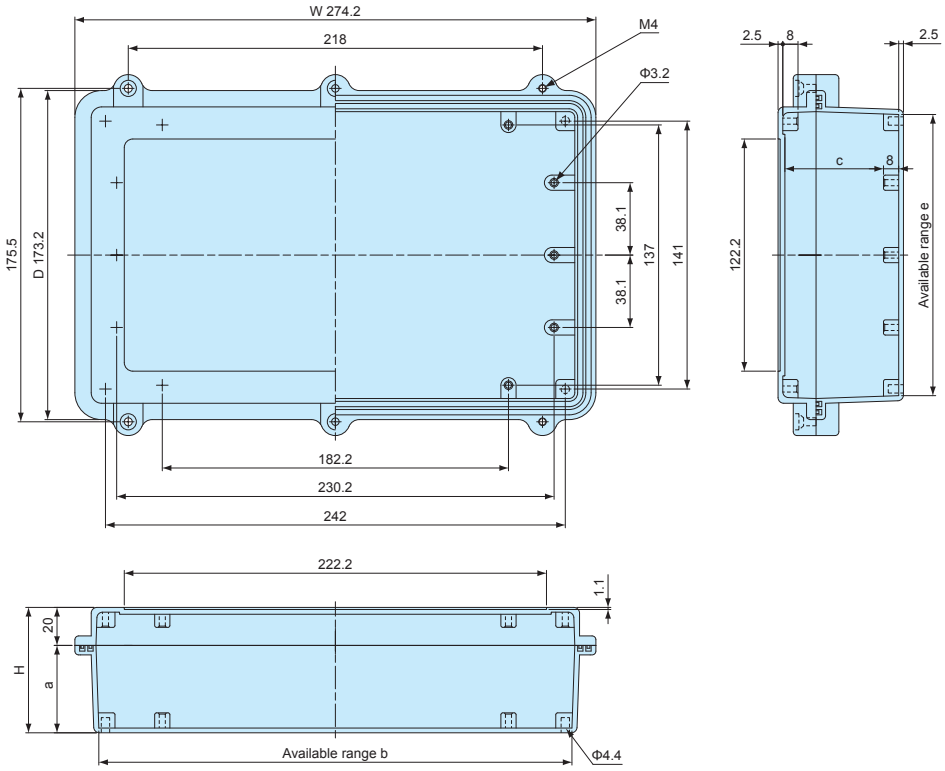

Product no.	W	D	H	a	b	c	e
HQ27-17- 7	274.2	173.2	66	46	249	51.9	148
HQ27-17-10	274.2	172.7	100	80	249	85.9	148

EMI SHIELDING TEST DATA

Test Result by Gestek

Date : 2007/12/20

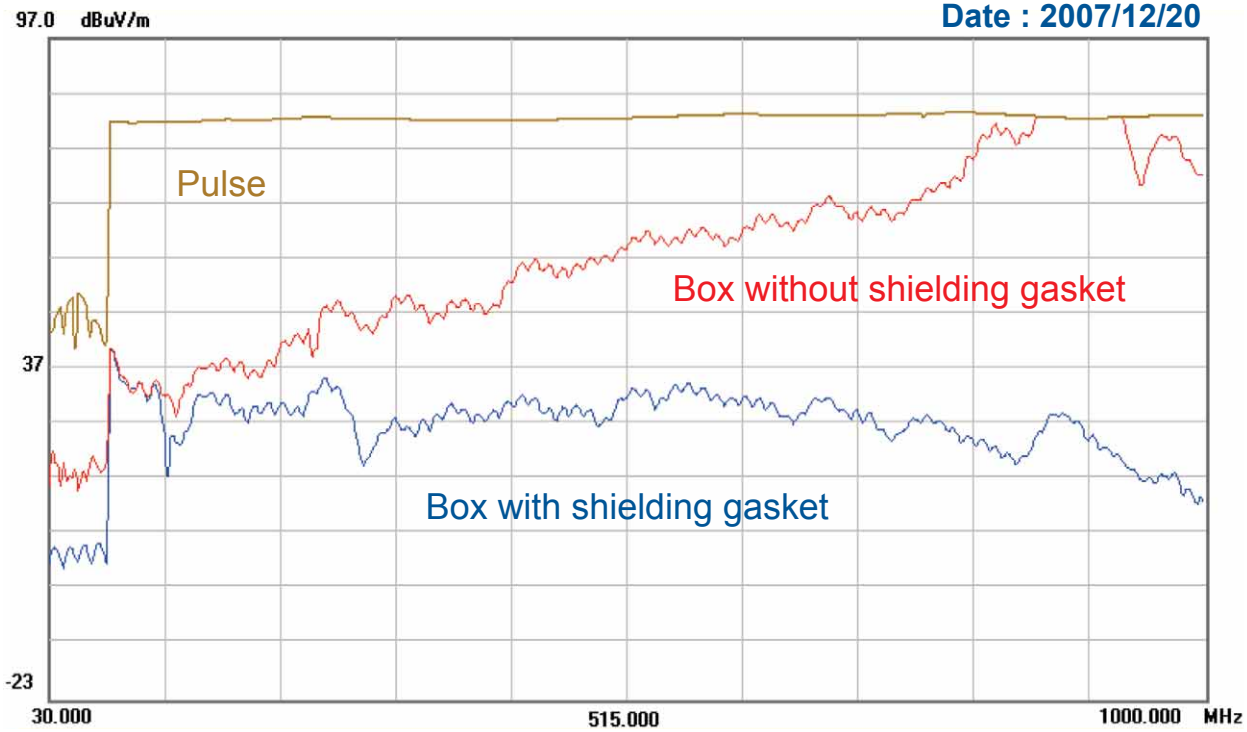

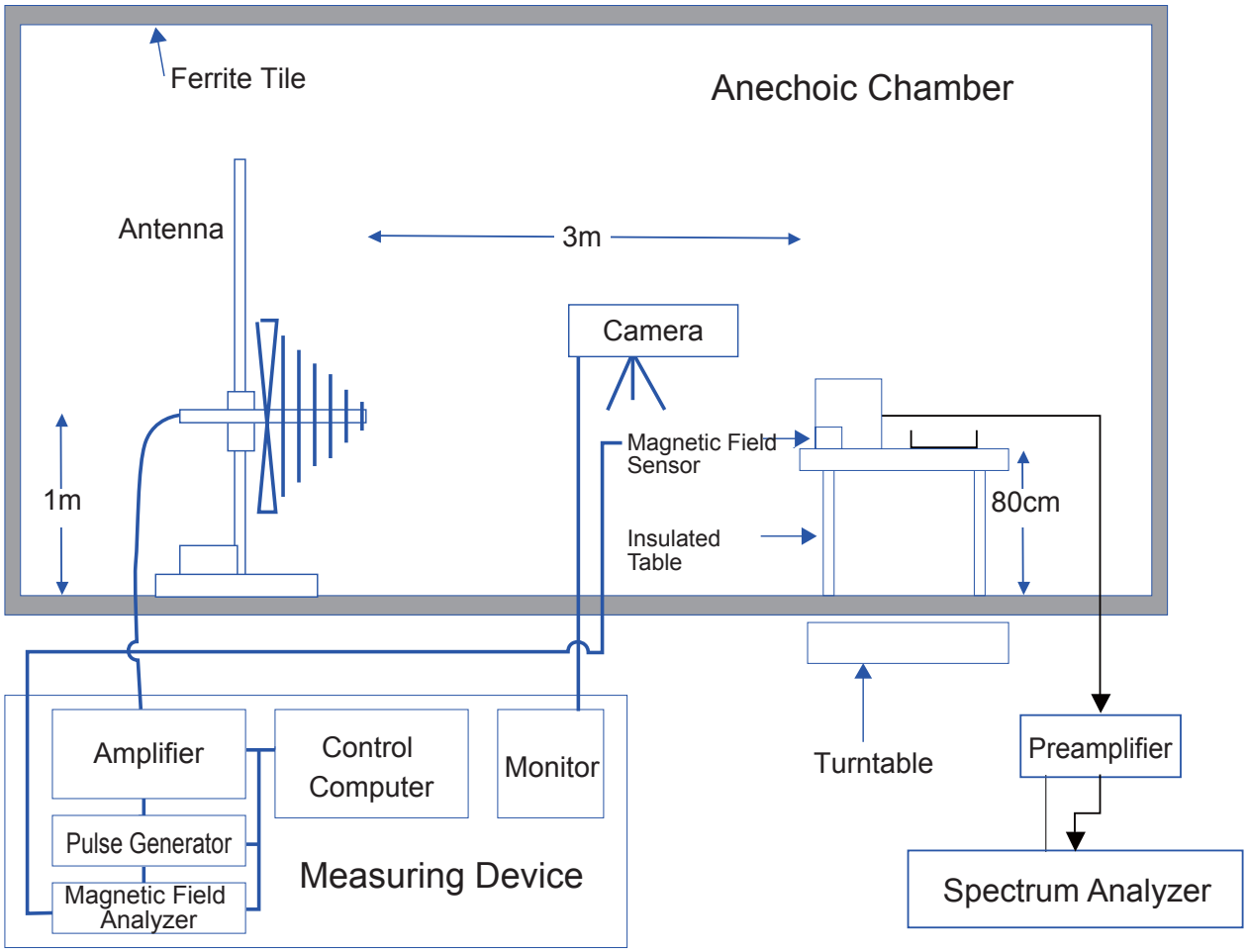

HQF SERIES MOUNTING BRACKET for HQ

■ DXF/DWG/PDF drawings available on our website.

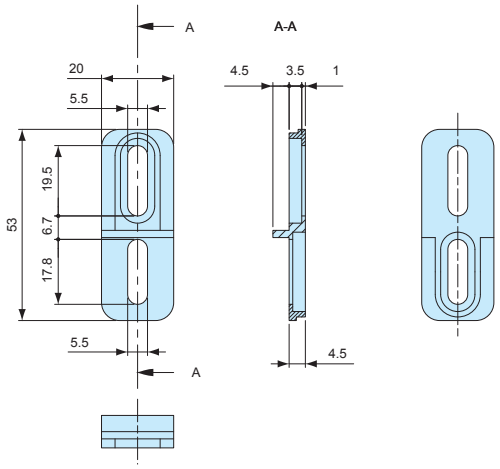

Components

Part name	Pcs	Material	Color / Finish
Mounting bracket	4	Diecast aluminium ADC12	Powder coated • Unfinished
Screw	4	Stainless steel	Unfinished

Product no. / Feature

Product no.	Color / Finish	Suitable box	Pack of
HQF-1G	Light gray / Powder coated	HQ all models	4
HQF-1N	Unfinished	HQ all models	4

MT SERIES MOUNTING SCREW for HQ

Product no. / Feature

Product no.	Material	Color / Finish	Pack of
MT3.5-8K	Steel	Trivalent chromate	4

HQG SERIES WATERPROOF GASKET for HQ

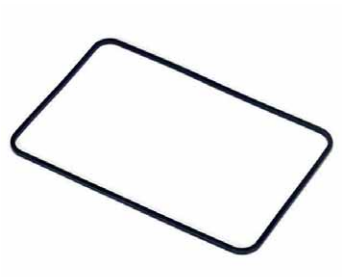

Product no. / Suitable box

Product no.	Suitable box
HQG1010	HQ10-10-□
HQG1510	HQ15-10-□
HQG1616	HQ16-16-□
HQG1910	HQ19-10-□
HQG2015	HQ20-15-□
HQG2618	HQ26-18-□
HQG2717	HQ27-17-□

■ Material : Silicone

HQE SERIES SHIELDING GASKET for HQ

EMC Shielding Effects

Product no. / Suitable box

Product no.	Suitable box
HQE1010	HQ10-10-□
HQE1510	HQ15-10-□
HQE1616	HQ16-16-□
HQE1910	HQ19-10-□
HQE2015	HQ20-15-□
HQE2618	HQ26-18-□
HQE2717	HQ27-17-□

■ Material : Stainless steel • Silicone (White)

HQP SERIES MOUNTING PLATE for HQ

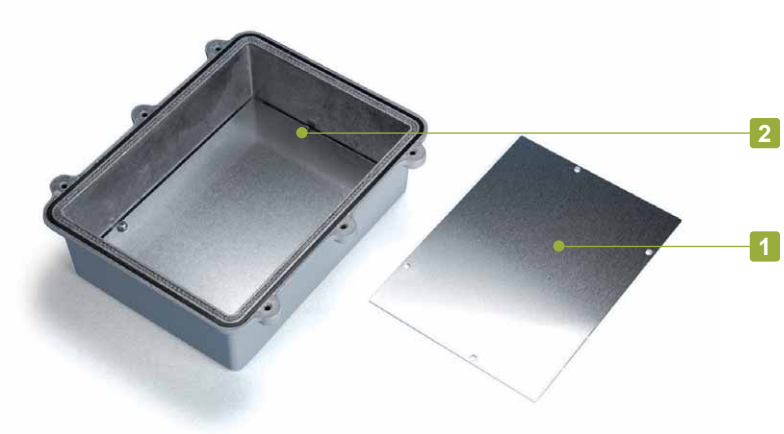

Components

No.	Part name	Pcs	Material	Color / Finish
1	Mounting plate	1	Aluminium A1050P t = 1.5	Unfinished
2	Screw (MT3.5-8K)	4	Steel	Trivalent chromate

■ Drawings below are reference examples only.
DXF/DWG/PDF drawings available on our website.

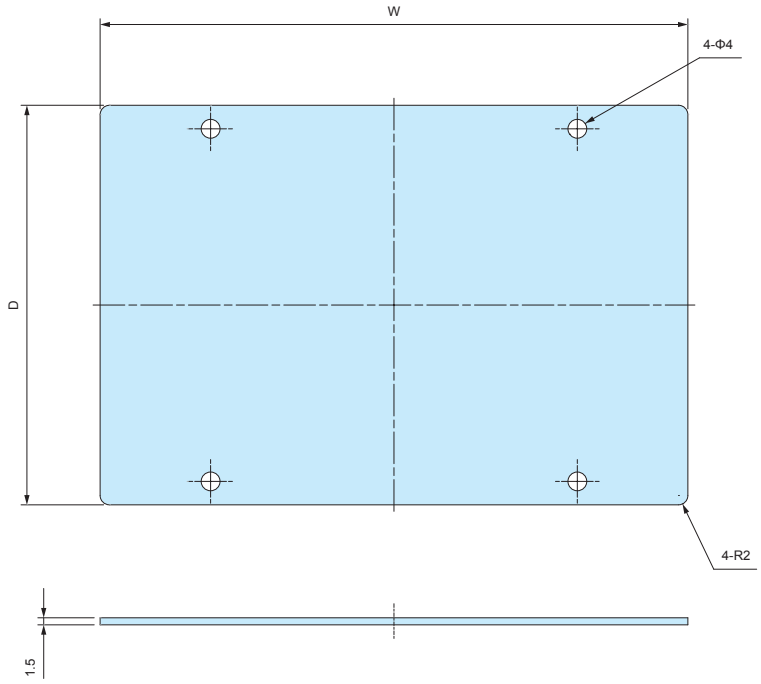

Product no. / Dimensions

Product no.	W	D	Suitable box
HQP10-10	63	68	HQ10-10-5 • HQ10-10-7
HQP15-10	122	72	HQ15-10-5 • HQ15-10-8
HQP16-16	132	132	HQ16-16-6 • HQ16-16-8
HQP19-10	166	70	HQ19-10-5 • HQ19-10-7
HQP20-15	172	122	HQ20-15-5 • HQ20-15-8
HQP26-18	235	155	HQ26-18-6
HQP27-17	248	147	HQ27-17-7 • HQ27-17-10

SSK SERIES POLE MOUNTING BRACKET

- Stainless steel pole mounting bracket.
- Welding onto stainless steel case can be performed to maintain waterproof ability.
- Use SSK-B series screws (see page SSK-M-2) for installation on diecast aluminium box.
- Use PKB mounting belt (see page PKB-1) for installation onto a pole.

SSK dimensions

■ DXF/DWG/PDF drawings available on our website.

SSK-S1

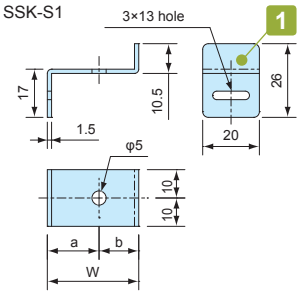

SSK-P50 • 60 • 75 • 80

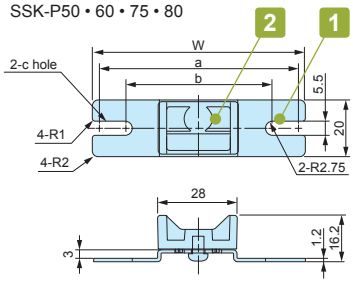

SSK-P100 • 120

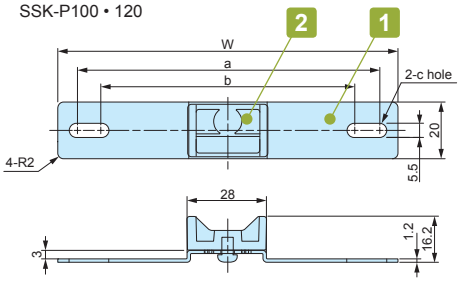

SSK-160 ~ 250

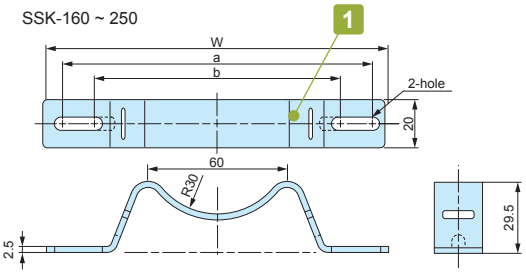

SSK-280 ~ 350

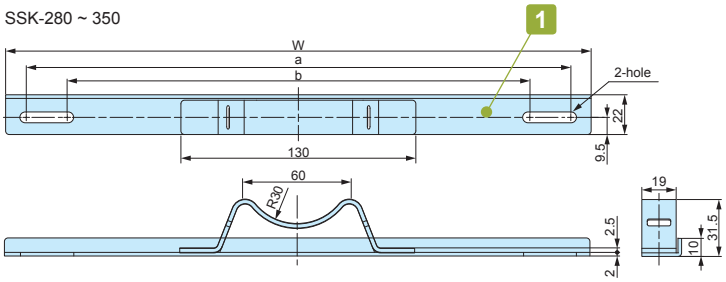

SSK-400

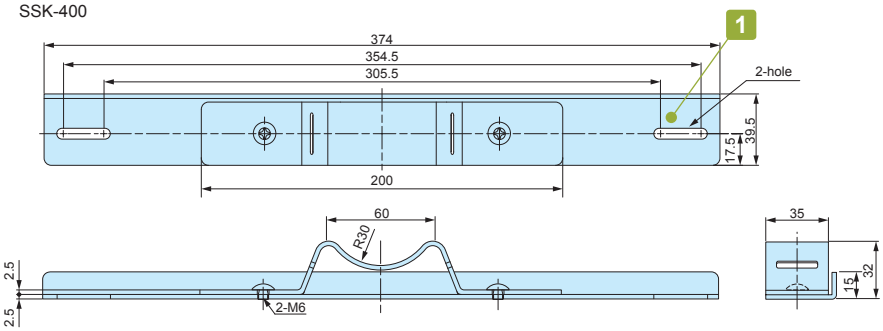

SSK-530

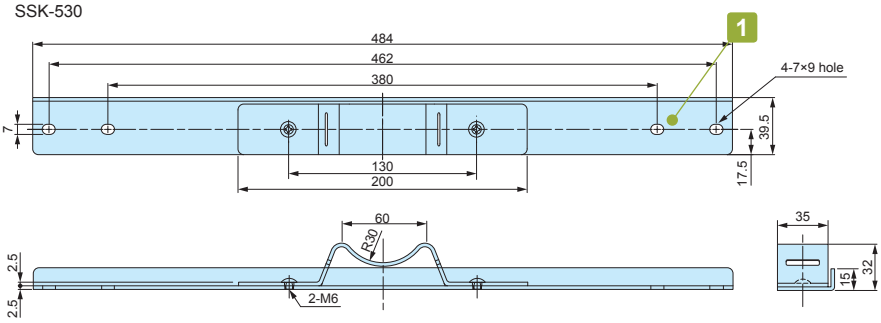

Components

No.	Part name	Pcs	Material	Color / Finish
1	Bracket	2	Stainless steel SUS304	Barrel finish
2	Mounting bracket (SSK-P models only)	2	ASA UL94HB	White gray

Product no. / Dimensions

Product no.	W	a	b	c	Suitable mounting belt	Pack of
SSK-S1	32.25	18.25	14	—	PKB-10PM, 10P, PKB-10S	4
SSK-P50	50	44.5	37.5	5.5× 9	PKB-10PM, 10P, PKB-10S	2
SSK-P60	60	54.5	47.5	5.5× 9	PKB-10PM, 10P, PKB-10S	2
SSK-P75	75	69.5	55.5	5.5×12.5	PKB-10PM, 10P, PKB-10S	2
SSK-P80	80	74.5	64.5	5.5×10.5	PKB-10PM, 10P, PKB-10S	2
SSK-P100	100	88.1	76.5	5.5×11.3	PKB-10PM, 10P, PKB-10S	2
SSK-P120	120	106.5	88.5	5.5×14.5	PKB-10PM, 10P, PKB-10S	2
SSK-160	142	129.5	106.5	–	PKB-10PM, 10P, PKB-10S	2
SSK-170	152	142.3	101	–	PKB-10PM, 10P, PKB-10S	2
SSK-200	174	161.5	112.5	–	PKB-10PM, 10P, PKB-10S	2
SSK-210	192	180.5	131.5	–	PKB-10PM, 10P, PKB-10S	2
SSK-250	230	215.5	166.5	–	PKB-10PM, 10P, PKB-10S	2
SSK-280	260	244.5	195.5	–	PKB-10PM, 10P, PKB-10S	2
SSK-300	280	264.5	215.5	–	PKB-10PM, 10P, PKB-10S	2
SSK-350	324	302.5	253.5	–	PKB-10PM, 10P, PKB-10S	2
SSK-400	374	354.5	305.5	–	PKB-20S	2
SSK-530	484	462	380	7×9	PKB-20S	2

SSK-B SERIES MOUNTING SCREW SET for SSK

- Mounting screw set for use with SSK pole mounting bracket.
- See below chart for appropriate screw / box combination.
- Material / Finish : Stainless steel / Unfinished.

Product no. / Dimensions

Product no.	Included screws	Suitable box	Pcs
SSK-B4-15N	M4-15 Pan head with nut	AW5-4-7 ~ AW8-5-18	4
SSK-B4-25N	M4-25 Pan head with nut	BDN9-9-6, BDN10-14-7	4
SSK-B5-8T	M5-8 Binding head tapping	HQ series	4
SSK-B5-15N	M5-15 Pan head with nut	AW9-9-10 ~ AW21-9-31	4
SSK-B5-25N	M5-25 Pan head with nut	BDN12-22-8, BDN16-26-9	4

- Installation Example

M5 thread fastening

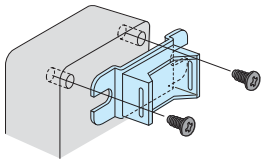

SSK-B5-8T

M4/M5 Pan head with nut fastening

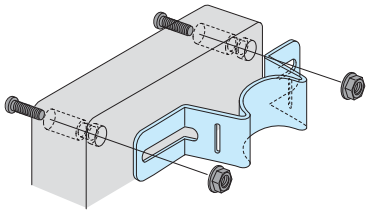

SSK-B4-15N SSK-B4-25N
SSK-B5-15N SSK-B5-25N
SSK-B5-35N SSK-B6-40N

POLE MOUNTING BRACKET / SCREW SET MATCHING CHART

BDN series

Box Product no.		SSK Product no.		Screw set Product no.
		Vertical mount	Horizontal mount	
BDN	9-9-6	SSK-P75	SSK-P100	SSK-B4-25-N
	10-14-7	SSK-P80	SSK-160	SSK-B4-25-N
	12-22-8	SSK-P100	SSK-250	SSK-B5-25-N
	16-26-9	SSK-160	SSK-280	SSK-B5-25-N

HQ series

Box Product no.		SSK Product no.		Screw set Product no.
		Vertical mount	Horizontal mount	
HQ	10-10-5 • 10-10-7	SSK-P50	–	SSK-B5-8T
	15-10-5 • 15-10-8	SSK-P80	SSK-160	SSK-B5-8T
	15-11-3	SSK-P100	SSK-160	SSK-B5-8T
	16-16-6 • 16-16-8	SSK-170	SSK-170	SSK-B5-8T
	19-10-5 • 19-10-7	–	SSK-200	SSK-B5-8T
	20-15-3 • 20-15-5 • 20-15-9	SSK-160	SSK-210	SSK-B5-8T
	26-18-6	SSK-200	SSK-280	SSK-B5-8T
	27-17-7 • 27-17-10	SSK-170	SSK-280	SSK-B5-8T

SSM • SSB series

■ Installation should be done by welding.

Box Product no.				SSK Product no.	
				Vertical mount	Horizontal mount
SSM SSB	121508			SSK-S1	–
	151508	152206	152210	SSK-160	–
	202010	202806		SSK-210	–
	202812	223312			
	304015			SSK-300	–

■ SSK bracket is different depending on mount type (Vertical or Horizontal).

Vertical mount
(Longer vertical side)

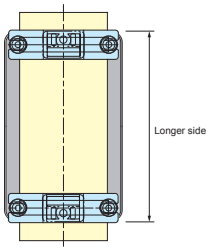

Horizontal mount
(Longer horizontal side)

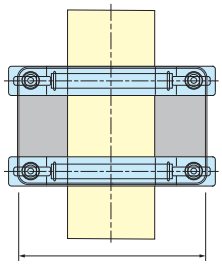

AW series

Box Product no.		SSK Product no.		Screw set Product no.
		Vertical mount	Horizontal mount	
AW	5-4-7	–	SSK-P100	SSK-B4-15N
	5-4-9	–	SSK-P120	SSK-B4-15N
	5-4-11	–	SSK-160	SSK-B4-15N
	5-4-14	–	SSK-200	SSK-B4-15N
	7-7-8	SSK-P50	SSK-P120	SSK-B4-15N
	7-7-11	SSK-P50	SSK-160	SSK-B4-15N
	7-7-15	SSK-P50	SSK-210	SSK-B4-15N
	7-7-20	SSK-P50	SSK-250	SSK-B4-15N
	7-7-25	SSK-P50	SSK-300	SSK-B4-15N
	8-5-9	SSK-P75	SSK-160	SSK-B4-15N
	8-5-12	SSK-P75	SSK-160	SSK-B4-15N
	8-5-14	SSK-P75	SSK-200	SSK-B4-15N
	8-5-18	SSK-P75	SSK-250	SSK-B4-15N
	9-9-10	SSK-P75	SSK-160	SSK-B5-15N
	9-9-13	SSK-P75	SSK-170	SSK-B5-15N
	9-9-17	SSK-P75	SSK-250	SSK-B5-15N
	9-9-22	SSK-P75	SSK-280	SSK-B5-15N
	9-9-28	SSK-P75	SSK-350	SSK-B5-15N
	11-6-11	SSK-P100	SSK-160	SSK-B5-15N
	11-6-15	SSK-P100	SSK-210	SSK-B5-15N
	11-6-19	SSK-P100	SSK-250	SSK-B5-15N
	11-6-24	SSK-P100	SSK-300	SSK-B5-15N
	12-8-11	SSK-P120	SSK-160	SSK-B5-15N
	12-8-14	SSK-P120	SSK-200	SSK-B5-15N
	12-8-17	SSK-P120	SSK-250	SSK-B5-15N
	12-8-22	SSK-P120	SSK-280	SSK-B5-15N
	16-9-14	SSK-160	SSK-200	SSK-B5-15N
	16-9-18	SSK-160	SSK-250	SSK-B5-15N
	16-9-23	SSK-160	SSK-280	SSK-B5-15N
	16-9-28	SSK-160	SSK-350	SSK-B5-15N
	21-9-17	SSK-210	SSK-250	SSK-B5-15N
	21-9-21	SSK-210	SSK-280	SSK-B5-15N
	21-9-26	SSK-210	SSK-350	SSK-B5-15N
	21-9-31	SSK-210	SSK-400	SSK-B5-15N

PKB SERIES POLE MOUNTING BELT

NEW SIZE

PKB−10PM, 10P

PKB−10S, 20S

- New shorter belt type PKB-10PM is available for φ25 to φ60mm poles. Other belt types are for φ60 to φ400mm poles.
- Designed for one time use only (not reusable).
- Strong stainless steel clamping type and easy installation plastic type are available.
- Use SSK mounting bracket for installation onto a pole.

- Drawings below are reference examples only. DXF/DWG/PDF drawings available on our website.

PKB dimensions

PKB-10PM, 10P

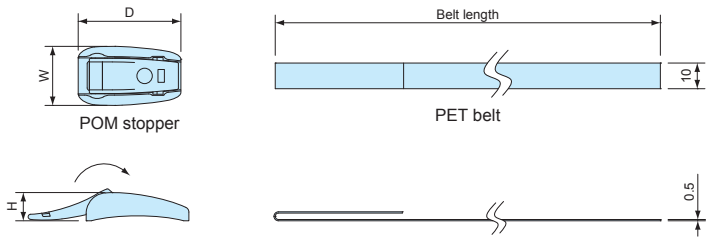

PKB-10S

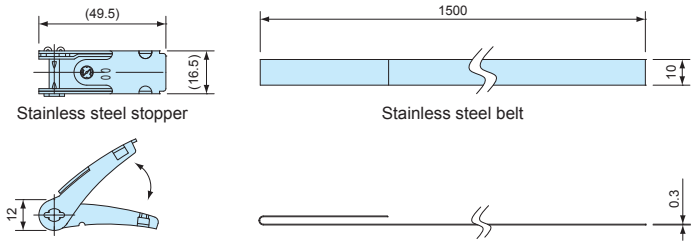

PKB-20S

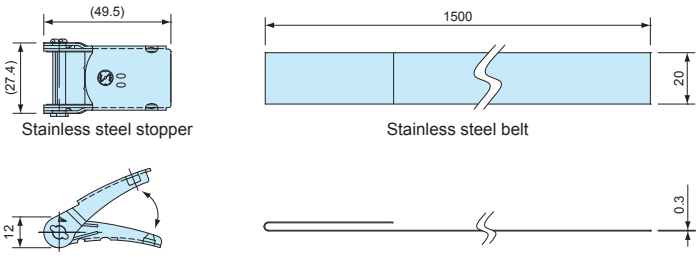

Components

Part name	Pcs	Material	Color / Finish
Stopper	2	POM • Stainless steel SUS304	Black • Barrel finish
Belt	2	PET • Stainless steel SUS430	Gray • Bright Annealed finish

Product no. / Dimensions

Product no.	W	D	H	Belt material	Belt length	Tensile strength (horizontal)	Weight (g)	Pack of
NEW PKB-10PM	24	23	11	PET	500mm	0.8kN	14	2
PKB-10P	23	40	11	PET	1,500mm	1.3kN	31.8	2
PKB-10S	–	–	–	Stainless steel	1,500mm	1.4kN	101.6	2
PKB-20S	–	–	–	Stainless steel	1,500mm	2.9kN	182.2	2

FM200 SERIES ELASTOMER CARRYING HANDLE

NEW

■ DXF/DWG/PDF drawings available on our website.

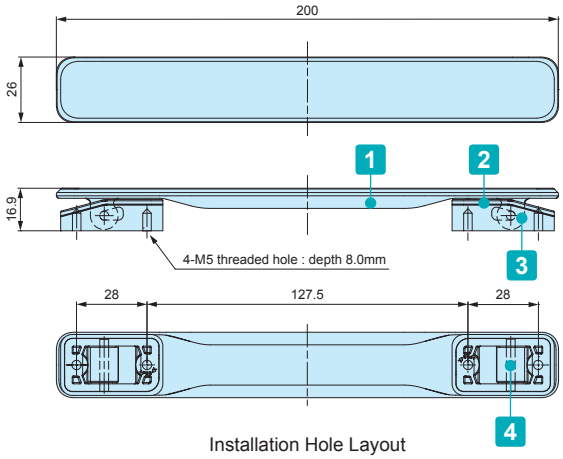

Installation Hole Layout

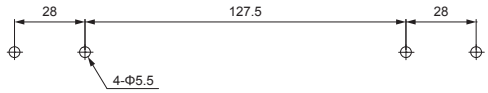

■ Comfortable and easy to grip elastomer handle.

Technical Data
Max load : 20kg

Components

No.	Part name	Pcs	Material	Color / Finish
1	Grip	1	PU	Black • Gray
2	Base	2	PA6	Black • Gray
3	Base cover	2	ABS	Black • Gray
4	Shaft	2	SWCH	Nickel plated
—	Screw (Pan head tapping M5-8)	4	Steel	Trivalent chromate

Product no.

Product no.	
● Black	● Gray
NEW FM200B	NEW FM200G

MH SERIES CARRYING HANDLE

■ DXF/DWG/PDF drawings available on our website.

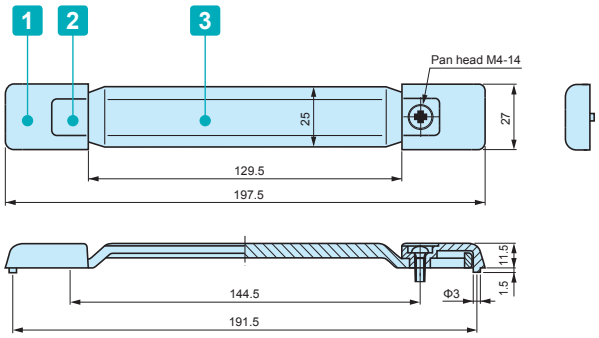

Installation Hole Layout

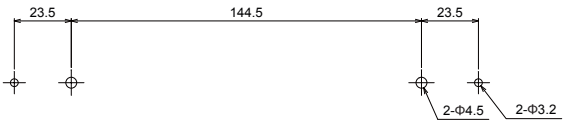

Components

No.	Part name	Pcs	Material	Color / Finish
1	Holder	2	PC + ABS	Black • Gray
2	Blind cap	2	PP + Elastomer	Black • Gray
3	Grip	1	PP + Elastomer	Black • Gray
—	Screw (Pan head M4-14)	2	Steel	Trivalent chromate
—	Nut	2	Steel	Trivalent chromate
—	Spring washer	2	Steel	Trivalent chromate

Product no.

Product no.	
● Black	● Gray
MH-197B	MH-197G

Technical Data
Max load : 20kg

BH SERIES ROUNDED ALUMINIUM HANDLE

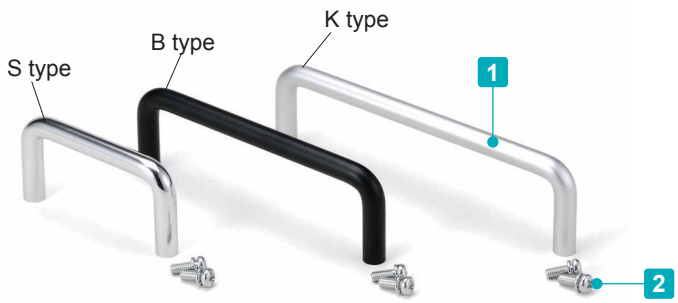

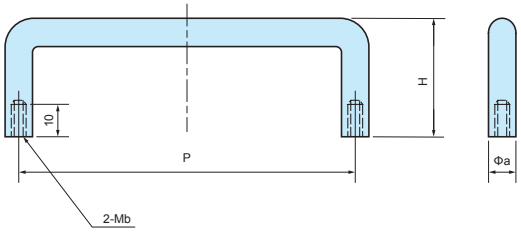

Components

No.	Part name	Pcs	Material	Color / Finish
1	Handle	1	Extruded aluminium A5056S	Polished • Matte anodized
2	Screw	2	Steel	Trivalent chromate

Product no. / Dimensions

■ K type only available on BH-100, 120, 150, and 180 models.

Product no.			P	H	a	b	Pack of
● Silver polished	● Black matte anodized	● Silver matte anodized					
BH- 26S	BH- 26B	–	26	25	6	3	2
BH- 30S	BH- 30B	–	30	35	8	4	2
BH- 50S	BH- 50B	–	50	35	8	4	2
BH- 60S	BH- 60B	–	60	35	8	4	2
BH- 70S	BH- 70B	–	70	35	8	4	2
BH- 80S	BH- 80B	–	80	35	8	4	2
BH-100S	BH-100B	BH-100K	100	35	8	4	2
BH-110S	BH-110B	–	110	35	8	4	2
BH-120S	BH-120B	BH-120K	120	35	8	4	2
BH-150S	BH-150B	BH-150K	150	35	8	4	2
BH-180S	BH-180B	BH-180K	180	35	8	4	2

Z-P SERIES WASHER for HANDLE

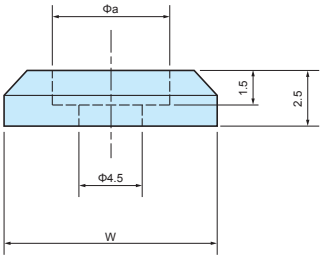

■ Brass washer for BH • KH series.

Product no. / Dimensions

■ Material / Brass

Product no.		W	a	Pack of
Chrome plated	Black painted			
Z-P6S	Z-P6B	10	6.2	10
Z-P8S	Z-P8B	12	8.2	10

OH SERIES ALUMINIUM HANDLE

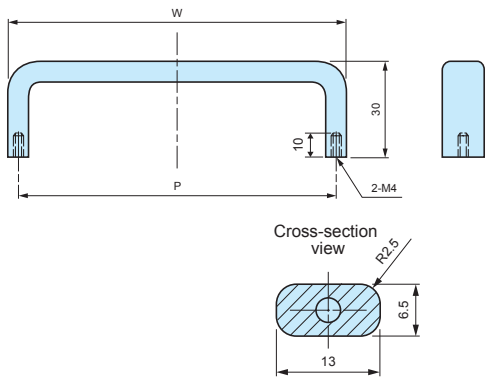

Components

No.	Part name	Pcs	Material	Color / Finish
1	Handle	1	Extruded aluminium A6063S-T5	Matte anodized
2	Screw (M4-10 Pan head with spring washer)	2	Steel	Trivalent chromate

Product no. / Dimensions

Product no.		P	W	Pack of
● Black matte anodized	● Silver matte anodized			
OH- 55B	OH- 55K	55	61.5	2
OH- 70B	OH- 70K	70	76.5	2
OH- 85B	OH- 85K	85	91.5	2
OH-100B	OH-100K	100	106.5	2
OH-120B	OH-120K	120	126.5	2
OH-140B	OH-140K	140	146.5	2
OH-170B	OH-170K	170	176.5	2

KH SERIES ANGLED ALUMINIUM HANDLE

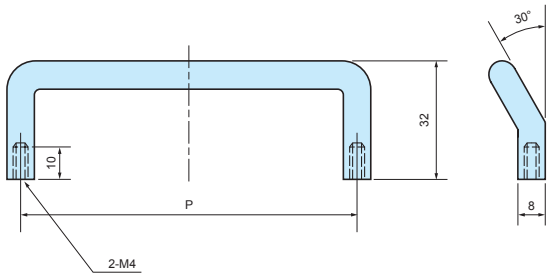

Components

No.	Part name	Pcs	Material	Color / Finish
1	Handle	1	Extruded aluminium A5056S	Polished • Matte anodized
2	Screw (M4-10 Pan head with spring washer)	2	Steel	Trivalent chromate

Product no. / Dimensions

Product no.		P	Pack of
● Silver polished	● Black matte anodized		
KH- 70S	KH- 70B	70	2
KH-100S	KH-100B	100	2

AFS•AFM series ALUMINIUM ISOLATION FEET

- The surface treatment and finish allows the feet to exhibit a polished and luxurious feel.
- Non-slip NBR O-ring is present on the underside of the feet.
- Suitable for use in audio devices.

Available in both internal and external screw installation type.

External type / Shot blast finish (AFS series)

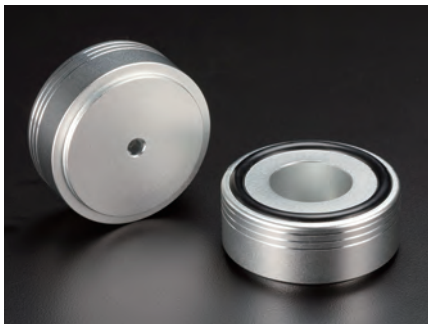

The external type is secured via screws from the underside / base of the feet to the enclosure.
A thread hole is required for direct securing, while a circular hole is required for lock nut securing.

The shot blast finish provides a high quality surface finish look, and pairing well with various types of enclosure surfaces.

Available in both silver and black.

Internal type / Reflective finish (AFM series)

The internal type is secured via screws from the inside of the enclosure. A circular hole is required for securing into the pre-made threads in the top-side of the feet.

The reflective surface finish adds a high quality touch to the unit, allow it to have a luxurious look.

Available only in Silver.

Product no. / Dimensions

Product no.		D	H	Installation type	C	a	b	Pack of
● Silver	● Black							
AFS20- 8S	AFS20- 8B	20	8	External	Φ3.4	3	9	4
AFS25-10S	AFS25-10B	25	10	External	Φ4.5	4	12	4
AFS30-12S	AFS30-12B	30	12	External	Φ4.5	5	12	4
AFS35-14S	AFS35-14B	35	14	External	Φ4.5	5	12	4
AFS39-16S	AFS39-16B	39	16	External	Φ4.5	5	15	4
AFS44-18S	AFS44-18B	44	18	External	Φ4.5	5	20	4
AFS55-20S	AFS55-20B	55	20	External	Φ5.5	5	20	4
AFM15- 7S	–	15	7	Internal	M3	4	–	4
AFM20- 9S	–	20	9	Internal	M3	5	–	4
AFM25-12S	–	25	12	Internal	M4	7	–	4
AFM30-14S	–	30	14	Internal	M4	8	–	4
AFM35-16S	–	35	16	Internal	M4	10	–	4
AFM39-18S	–	39	18	Internal	M4	10	–	4
AFM44-20S	–	44	20	Internal	M4	10	–	4
AFM55-22S	–	55	22	Internal	M5	15	–	4

AFS • AFM dimensions

■ DXF/DWG/PDF/STP drawings available on our website.

AFS SERIES

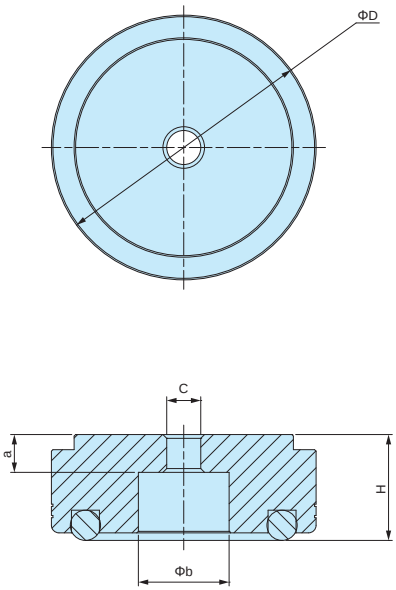

AFM SERIES

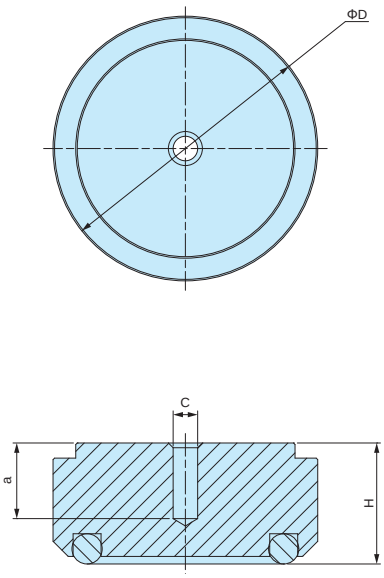

APPLICATION EXAMPLE

RS series PLATED PLASTIC FEET

- Suitable for audio equipment use.
- Elastomeric foam pad can be found at the underside of the feet.

RS dimensions

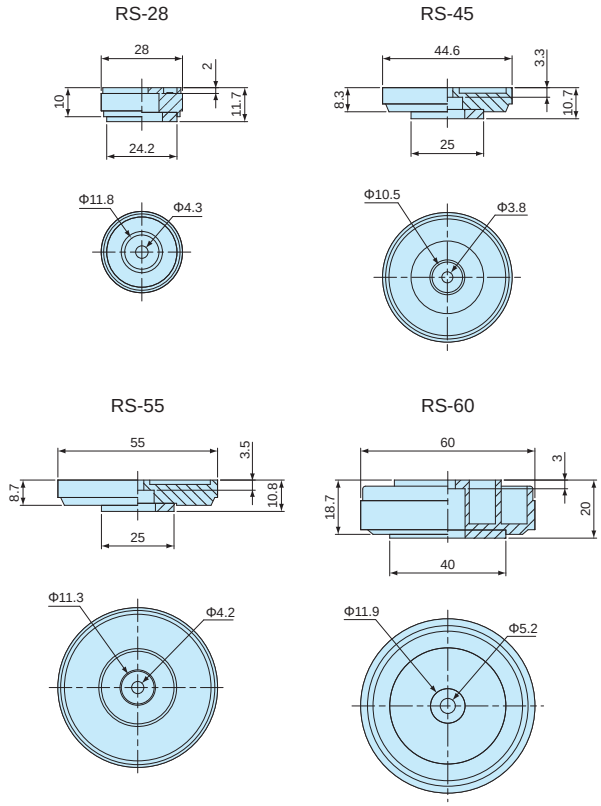

- DXF/DWG/PDF drawings available on our website.

Product no. / Dimensions

Product no.		Material	Pack of
Silver	Gold		
RS-28S	RS-28G	ABS UL94HB / Polyester / EVA	4
RS-45S	RS-45G	ABS UL94HB / Polyester / EVA	4
RS-55S	RS-55G	ABS UL94HB / Polyester / EVA	4
RS-60S	RS-60G	ABS UL94HB / Polyester / EVA	4

TC series ALUMINIUM FEET

- Aluminium material gives it a refined and elegant look.
- Suitable for audio equipment use.
- Elastomeric foam pad can be found on the underside of the feet.

TC dimensions

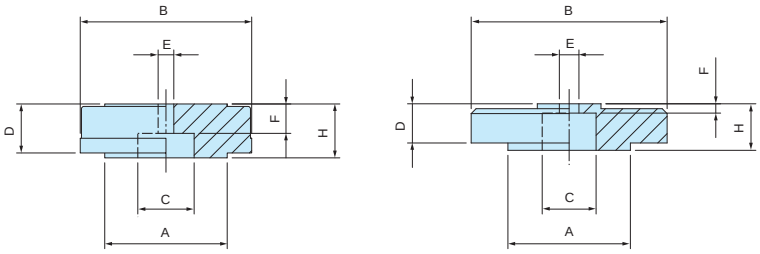

TC–1 TC–2 • TC-3

- DXF/DWG/PDF drawings available on our website.

Product no. / Dimensions

Product no.		A	B	C	D	E	F	H	Material	Pack of
Silver	Gold									
TC-1S	TC-1G	25	35	11.5	9.7	3.4	5.6	11.5	ABS UL94HB / Aluminium / EVA	4
TC-2S	TC-2G	25	40	11	10.4	4.1	2.4	12.5	ABS UL94HB / Aluminium / EVA	4
TC-3S	TC-3G	25	45	11.7	13	4.2	7.5	15	ABS UL94HB / Aluminium / EVA	4

TB series ADHESIVE RUBBER FEET

■ Adhesive is present on the underside.

Product no. / Dimensions

■ Material : Rubber

Product no.			A	H	Pack of
● Black*	● White gray	● White			
TB- 7	–	–	6.7	4.2	10
TB- 8	–	TB- 8W	8	2.6	10
TB-10	–	–	10	2.8	10
TB-12	–	TB-12W	11.3	5.6	10
TB-14	–	–	14	8	10
TB-16	–	TB-16W	15.9	8	10
TB-21	–	–	21.6	8.5	10
TB-27	TB-27G	–	27.8	7.4	10

* No color code denotation required

TB dimensions

■ DXF/DWG/PDF drawings available on our website.

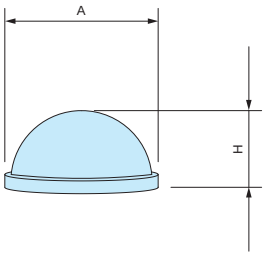

SJ-P series POLYURETHANE RUBBER FEET

■ Adhesive is present on the underside.

SJ-P dimensions

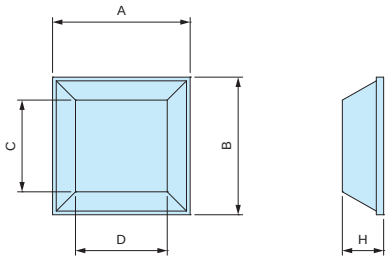

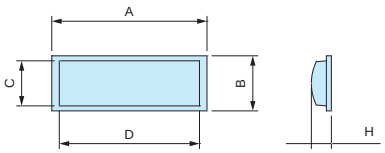

SJ-P1011

Product no. / Dimensions

■ Material / Color : Polyurethane / Black

Product no.	A	B	H	C	D	Pack of
SJ-P5007	10.4	10.4	2.5	7.5	7.5	10
SJ-P5008	12.7	12.7	3	9.5	9.5	10
SJ-P5018	12.7	12.7	5.8	7	7	10
SJ-P1004	15	15	4.5	10	10	10
SJ-P5023	20.6	20.6	7.6	12.7	12.7	10
SJ-P1011	15.5	5.5	2	4.5	14.5	10

■ DXF/DWG/PDF drawings available on our website.

B SERIES ADHESIVE RUBBER FEET

■ DXF/DWG/PDF drawings available on our website.

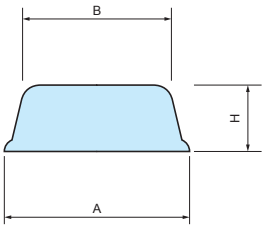

■ Injection molded type.

Product no. / Dimensions

■ Material : Synthetic rubber

Product no.	A	B	H	Color	Pack of
B 6-2	6	5	1.8	Black	10
B 8-4	8	7.7	3.5	Black	10
B10-4	10	9.2	4.2	Black	10
B11-3	10.8	10.2	3	Black	10
B11-5	11	9.6	5	Black	10
B12-4	12.7	10	3.8	Black	10
B15-5	15.4	14.8	5.1	Black	10
B16-7	16	13	7	Black	10
B19-4	19	15.8	4.2	Black	10
B21-7	21	17	7	Black	10
B23-5	22.8	22.4	5	Black	10
B26-11	26	20	11	Black	10
B 6-2G	6	5	1.8	Gray	10
B11-3G	10.8	10.2	3	Gray	10
B15-5G	15.4	14.8	5.1	Gray	10
B21-7G	21	17	7	Gray	10
B26-11G	26	20	11	Gray	10

B-P SERIES ADHESIVE RUBBER FEET

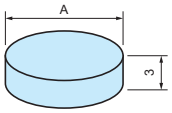

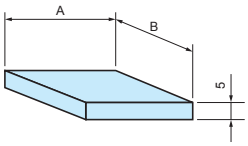

■ Press-punched type.

■ DXF/DWG/PDF drawings available on our website.

Product no. / Dimensions

■ Material / Color : Synthetic rubber / Black

Product no.	A	Pack of
B-P21	10	10
B-P22	20	10
B-P23	15	10

Product no. / Dimensions

■ Material / Color : Synthetic rubber / Black

Product no.	A	B	Pack of
B-P31	28	16	10
B-P32	46	26	10

TB SERIES ROUNDED ADHESIVE RUBBER FEET

NEW COLOR

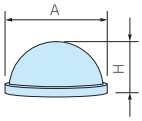

■ DXF/DWG/PDF drawings available on our website.

Product no. / Dimensions

■ Material : Synthetic rubber

Product no.		A	H	Pack of
● Black	● White (W) ● White gray (G)			
TB- 7	–	6.7	4.2	10
TB- 8	NEW TB- 8W	8	2.6	10
TB-10	–	10	2.8	10
TB-12	NEW TB-12W	11.3	5.6	10
TB-14	–	14	8	10
TB-16	NEW TB-16W	15.9	8	10
TB-21	–	21.6	8.5	10
TB-27	TB-27G	27.8	7.4	10

SF SERIES — SQUARE ADHESIVE RUBBER FEET - LOW COST TYPE

■ DXF/DWG/PDF drawings available on our website.

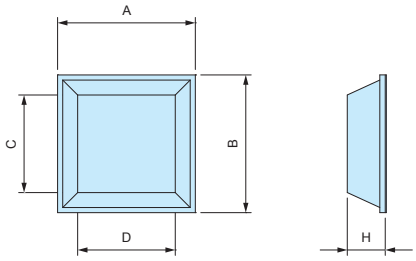

■ Square-shaped adhesive rubber feet.

Product no. / Dimensions

■ Material / Color : Synthetic rubber / Black

Product no.	A	B	H	C	D	Pack of
SF11-3	10.5	10.5	2.5	8.6	8.6	10
SF13-4	12.7	12.7	3.5	9	9	10
SF13-6	12.7	12.7	6	7	7	10
SF20-8	20	20	7.6	14	14	10

SJ-P SERIES — SQUARE ADHESIVE POLYRETHANE FEET

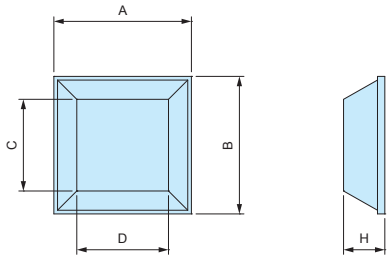

■ Strong adhesive strength with the use of rubber pressure sensitive adhesive.

■ Polyurethane material is resistant against color migration.

Product no. / Dimensions

■ Material / Color : Polyurethane / Black

Product no.	A	B	H	C	D	Pack of
SJ-P5007	10.4	10.4	2.5	7.5	7.5	10
SJ-P5008	12.7	12.7	3	9.5	9.5	10
SJ-P5018	12.7	12.7	5.8	7	7	10
SJ-P1004	15	15	4.5	10	10	10
SJ-P5023	20.6	20.6	7.6	12.7	12.7	10
SJ-P1011	15.5	5.5	2	4.5	14.5	10

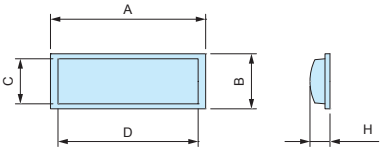

SJ-P1011

TN-27 — OVAL ADHESIVE RUBBER FEET

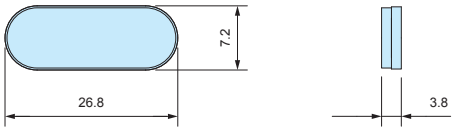

Product no. / Feature

■ Material / Color : Synthetic rubber / Black

Product no.	Pack of
TN-27	10

B-P SERIES SCREW MOUNT RUBBER FEET

■ DXF/DWG/PDF drawings available on our website.

■ Built-in washer and non-washer types are available.
■ Installation screws are separately sold.

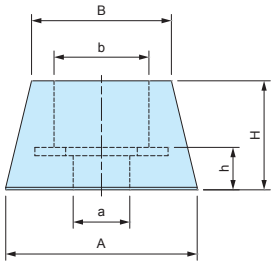

B-P1S, P1M, P1L, P2S, P4, P5

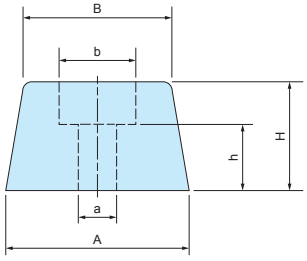

B-P1, P2, P3

Product no. / Dimensions

■ Color : Black

Product no.	A	B	H	a	b	h	Washer	Material	Pack of
B-P1S	11.5	8.4	7.2	3.4	5.7	3.2	○	Synthetic rubber	10
B-P1M	15	15	4	3.5	7.4	2.2	○	Synthetic rubber	10
B-P1	15	13	7.7	3	6	4.2	×	Synthetic rubber	10
B-P1L	16	13	7.8	3	6	3.7	○	Synthetic rubber	10
B-P2S	18	15	11	3	6	5	○	Synthetic rubber	10
B-P2	19	15	8	3	6	4.5	×	Synthetic rubber	10
B-P3	22	18	13	3	7.5	7	×	Synthetic rubber	10
B-P4	32	26	20	5	15	10	○	EPDM	10
B-P5	32	28	15	5	14	10	○	EPDM	10

B-P SERIES SNAP-IN RUBBER FEET

■ DXF/DWG/PDF drawings available on our website.

■ Hole milling required for installation.

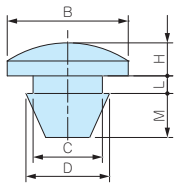

B-P10

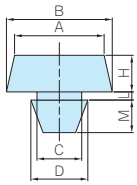

B-P10S, P11, P12

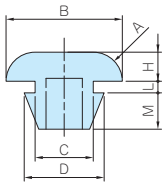

B-P13, P14, P15

Product no. / Dimensions

Product no.	A	B	H	C	D	L	M	Material	Color	Pack of
B-P10S	8	8	2	5	5.6	0.9	3	Silicone UL94V-0	Black	10
B-P10	—	11	3	6.3	7.6	1.6	4	Silicone UL94V-0	Black	10
B-P11	11	13	4.5	5.5	7	1	4	Synthetic rubber	Black	10
B-P12	15	17	4.5	5.5	7	1	4	Synthetic rubber	Black	10
B-P13	R3	12	3	5	7	1.6	4	EPDM	Black	10
B-P14	R4	14	4	6	9	1.6	5	EPDM	Black	10
B-P15	R4	16	4	8	11	1.6	5	EPDM	Black	10

A-P SERIES SCREW MOUNT ELASTOMER FEET

■ DXF/DWG/PDF drawings available on our website.

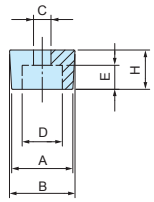

A–P1 ~ A–P5

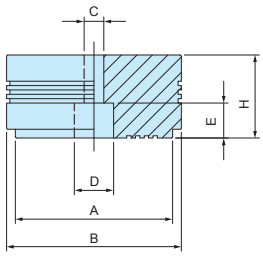

A–P6

- Prepare screws for installation.
- Resistant against color migration.

Product no. / Dimensions

■ Material / Color : Elastomer / Black

Product no.	A	B	H	C	D	E	Pack of
A-P1	9.4	10.8	4	3.3	6.8	2	10
A-P2	13.4	14.2	5.5	3	8	3.5	10
A-P3	14	15	9	4	9.5	6	10
A-P4	20	21	8	4	8.2	5	10
A-P5	20	24	14	5.5	8.6	8	10
A-P6	36	40	19	4.5	9	7.5	10

TP SERIES SNAP-IN ELASTOMER FEET

■ DXF/DWG/PDF drawings available on our website.

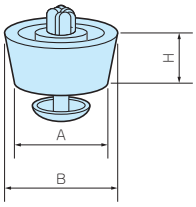

- Easy installation with snap-in pin.
- Require a hole for installation.
- Resistant against color migration.

Product no. / Dimensions

■ Material / Color : (Feet) LDPE • (PIN) PP / Black

Product no.	A	B	H	Mounting hole	Panel thickness	Pack of
TP-1	12	12.7	4.4	5	1.0 ~ 2.0	10
TP-2	15	15.7	4.4	5	1.0 ~ 2.0	10
TP-3	17.2	19.2	7.9	8	0.8 ~ 1.2	10
TP-4	18	20	10	8	1.0 ~ 2.5	10
TP-5	19.8	20.8	6.4	8	1.0 ~ 2.5	10
TP-6	19.5	23.7	13.7	8	1.0 ~ 2.5	10
TP-7	26.5	29.4	15	10	1.0 ~ 3.5	10

TM SERIES PLASTIC FEET

■ DXF/DWG/PDF drawings available on our website.

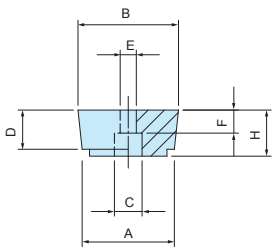

TM-1, TM-2

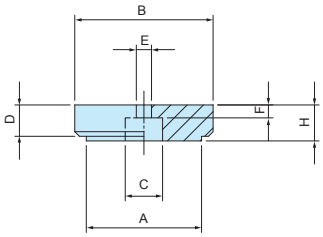

TM-1S, TM-3

- Plastic feet equipped with soft padding on the bottom to prevent sliding.

Product no. / Dimensions

Product no.	A	B	H	C	D	E	F	Feet material	Pad material	Color	Pack of
TM-1S	15.9	19.5	6.3	7	5.8	4	2.3	ABS UL94HB	Silicone	Black	10
TM-1	20	21.8	10	7.2	8.5	3.5	4.5	ABS UL94HB	EVA	Black	10
TM-2	20	21.8	15	7.2	13.5	3.5	4.5	ABS UL94HB	EVA	Black	10
TM-3	25	30	7.8	8.1	6.8	3.3	2.7	ABS UL94HB	EVA	Black	10

CNC MACHINING

CNC milling is a form of computer controlled machining. Similar in operation to drilling and cutting, it is able to create various hole styles and shapes by using a rotating cutting tool to bore into the object.

Extruded aluminium

- Mainly used for plastic, aluminium die-cast, and aluminium extrusion material types.
- Able to perform milling for various shapes and sizes.
- Recommended for small quantity customization.

Aluminium sheet

Diecast aluminium

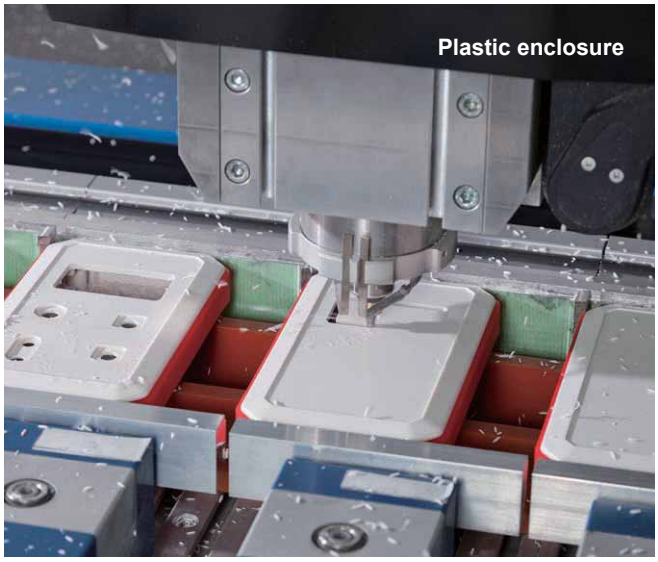
Plastic enclosure

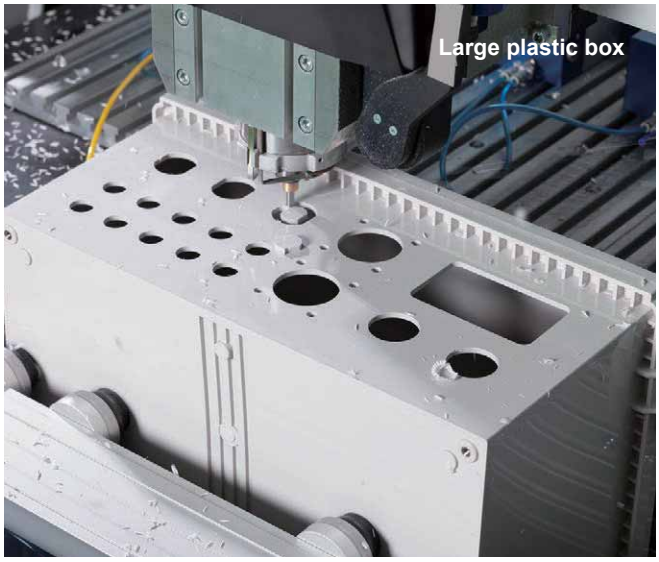
Large plastic box

ENGRAVING

By having the drill-head slightly milling the surface, the engraving of fine text or complex designs is able to be performed on a variety of surfaces, be it flat, curved, and so on.
Suitable for small batch print, and/or simple lettering. Font shall be similar to VAG Rounded font type.

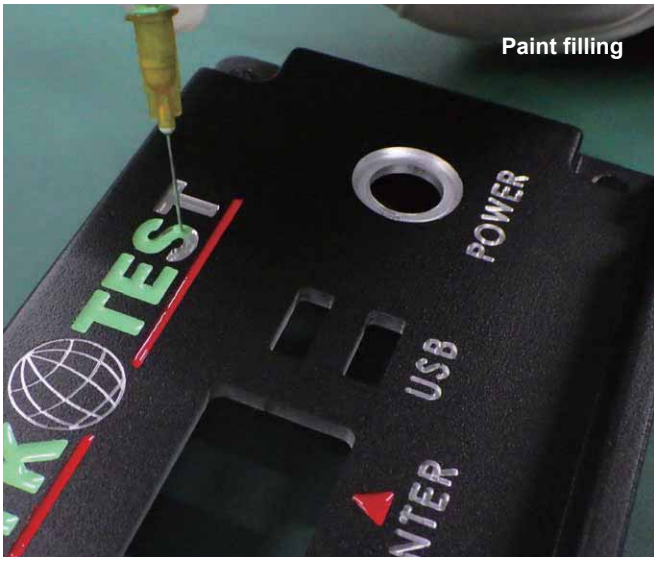

LASER CUTTING

Laser cutting utilizes a laser to perform cutting on an object, allowing various types and shapes of holes to be cut.
New fiber laser machine allows the processing of aluminium sheets with both high precision and speed.
Processing of Pure Aluminium 1050 is also possible with minimal burr as compared to conventional CO^2 laser machines, which causes excessive burring.

PUNCHING PRESS

What is punching press? It is a type of machine press used to cut holes in material via the use of various sized die sets.
Punching press allows the realization of high cost performance due to its high speed automated turret punching process, which significantly reduces machining lead-time.
Due to its ability to create designated sized holes by means of rapid multiple hole punches, this enables it to punch holes of various sizes and types quickly and efficiently.

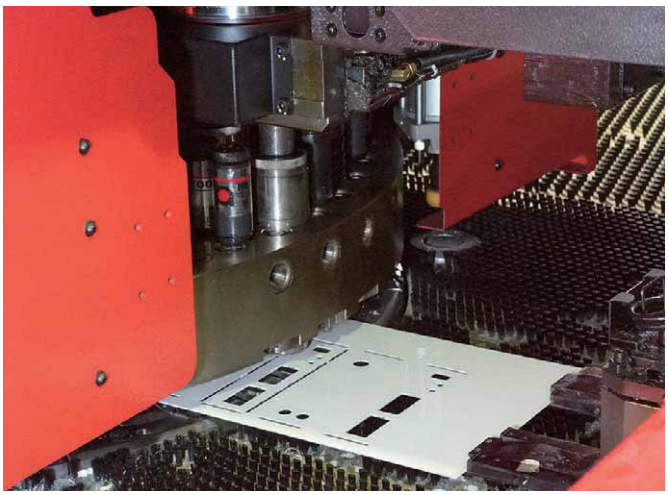

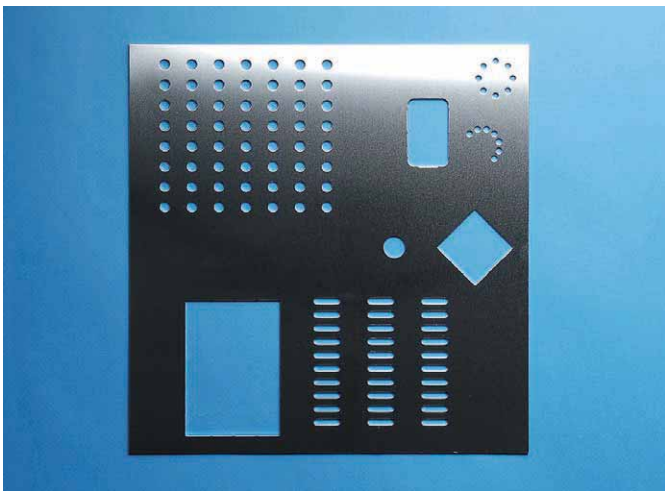

Circular hole

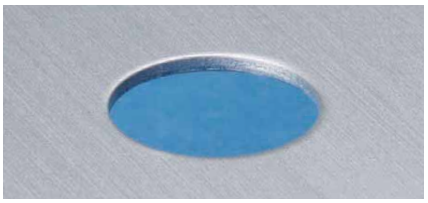

Circular holes as small as 1.0mm in diameter can be punched .

Nibbling press (rectangle)

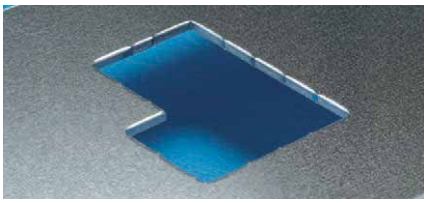

Complex or large rectangular shapes can be punched out with multiple presses.

Nibbling press (round)

Punching of large circular holes with multiple smaller die strokes.

Common connector shapes

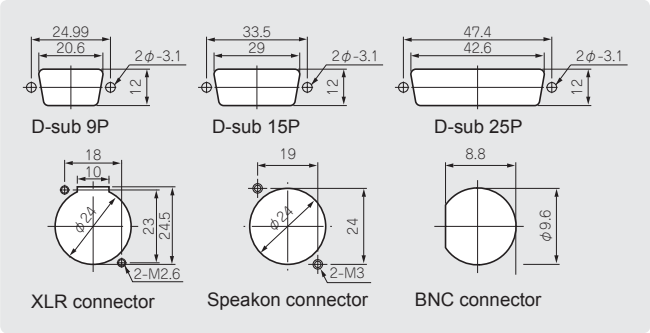

Unique shapes

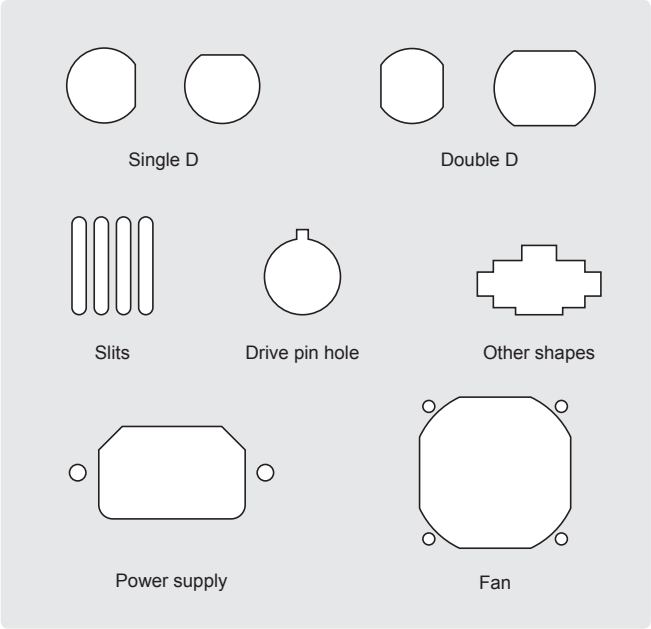

Burring punch

Increasing surface area on a thin metallic sheet for screw threads to bore into.

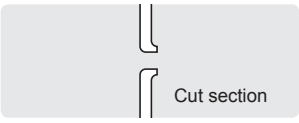

TAKACHI

DIGITAL PRINTED OVERLAY

3 reasons for low initial costs

Reason ①

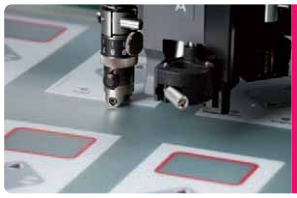

Cutting process → Avoiding the cost for cutting die manufacturing via our in-house cutting plotter.

Reason ②

Printing process → Saving the cost for print plates via utilization of our in-house digital inkjet printer.

Reason ③

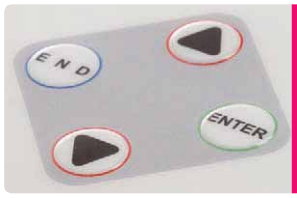

Embossing process → Reducing the cost for the embossing die via our new die manufacturing process.

Comparison of current and previous manufacturing methods

Current: Print data creation → Inkjet printing and laminating process → Cutting data creation → Cutting of double-sided tape, pasting, cutting of individual piece

Previous: Print plate creation → Printing and laminating process → Cutting die manufacture → Punching of double-sided tape, pasting, punching of individual piece

Cost・Production time

PRODUCTION PROCESS

1. Inkjet printing on film

2. Laminating

3. Cutting double-sided tape

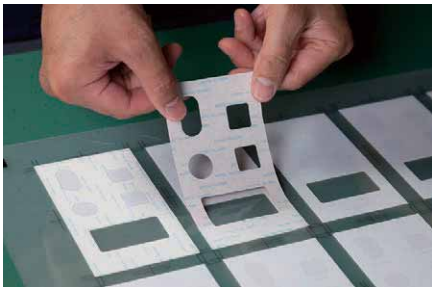

4. Sticking double-sided tape on printed film

5. Cutting the sheet to size

6. Embossing

7. Machining on enclosure

8. Sticking overlay sheet onto enclosure

9. Complete

CUSTOMIZATION EXAMPLE

INKJET PRINTING

Full color digitally designed image can be printed in 1 run.
No cost difference regardless of the number of colors used.

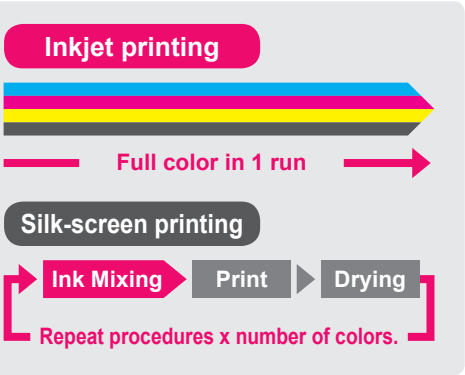

Low printing cost

Full color print possible in small quantities

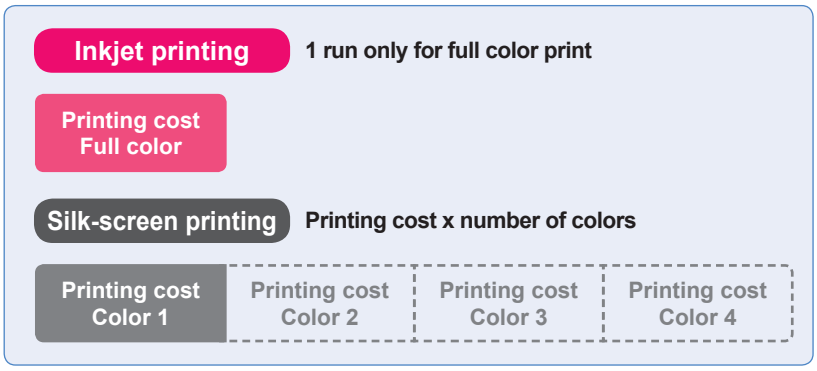

High quality printing of photo image and color gradation.

Print photo images in maximum 1,800 x 1,800 dpi quality.
Pictures, logos and unique designs with color gradation can be recreated in a high quality print.

Maximum printable enclosure size

D 420mm × W 594mm × H 270mm

Printable on surfaces with height differential

Printing is possible on recessed, sloped and rounded sections.

Gap difference is less than 2.0mm.

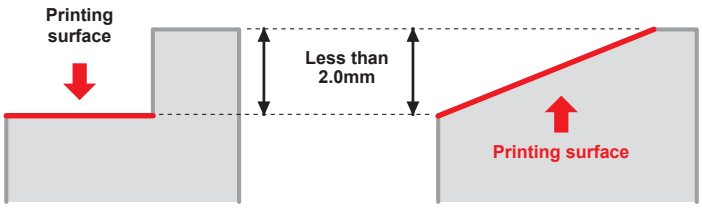

*Not suitable if height difference is more than 2.0mm.

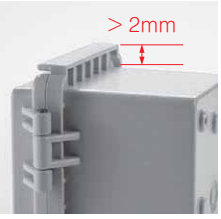

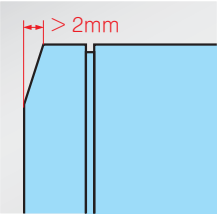

Printed example